c. Reassembly

(1) Wash the cone races, ball races and the steel balls, and pack with new grease. Use recommended fiber grease.

(2) In order to provide proper steerability, the steering stem nut should be torqued as follow.

1. Fasten the nut completely until it is locked.
2. Release the nut about 45 degrees unticlockwise.
3. Then fasten it with hand untill it is again locked.
4. Release it with hand a bit. Then proper steerability will be provided.

4.3 Front Cushion

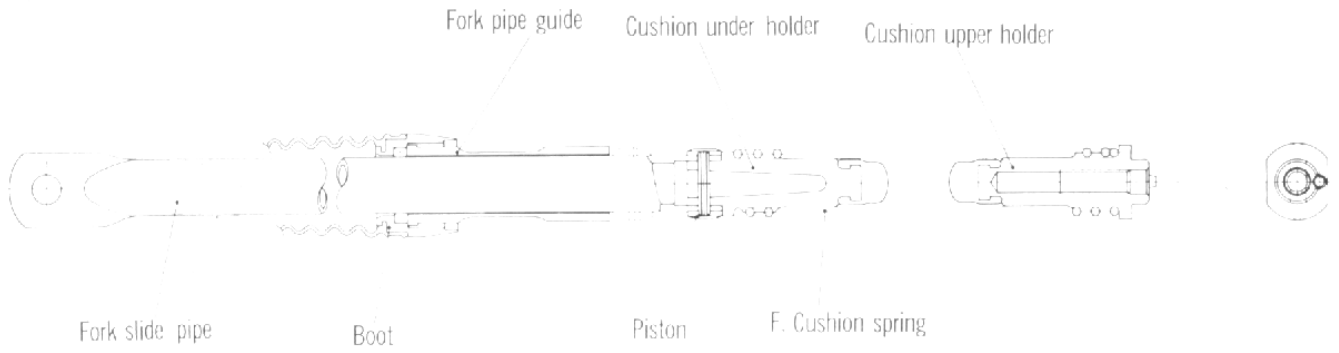

Fig. 63

a. Front Cushion Construction

The front wheel axle and axle nut assembles the cast aluminum hub consisting of two sets of 63010 radial ball bearings and an integral brake drum to the front brake panel which contains the brake shoes and speedometer gear. The front cushion, unlike the other types having a damper inside, has only a coil spring for cushion effect, considering the usage of this type.

Fig. 64

b. Disassembly

(1) Remove the front wheel in accordance with section "Front Wheel" in page 35.

(2) Remove the front fork top bridge in accordance with section "Handle" in page 30.

(3) Both front cushions can be pulled out from the bottom of the front cushion housing incorporated on the steering stem after releasing the front fork guide cap with a special tool (07072-09801). Fig. 64 shows the front cushion assembly.

(4) Fix the cushion upper holder with a vise as shown in Fig. 65 and hit the end of the cushion spring with a steel hammer through a driver in order to remove the spring from the upper holder. Excessive care should be taken not to damage the upper holder because it is made of aluminum alloy.

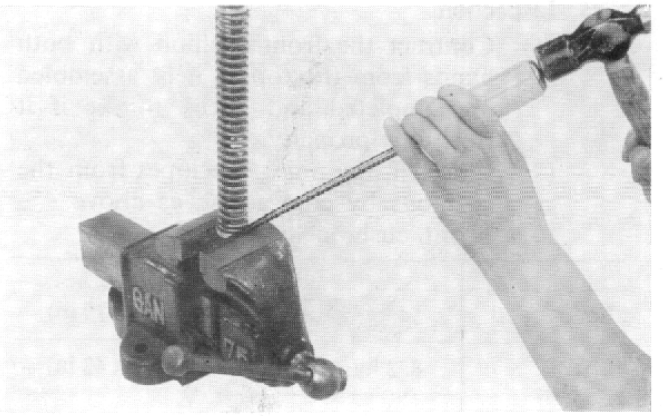

Fig. 65

(5) The under holder can be separated from the spring in the same way as the upper holder. When fixing the upper holder, the piston should be fixed with a vise.
The piston is rubber-coated on exterior so that care should be taken not to damage it when being fixed with a vise.

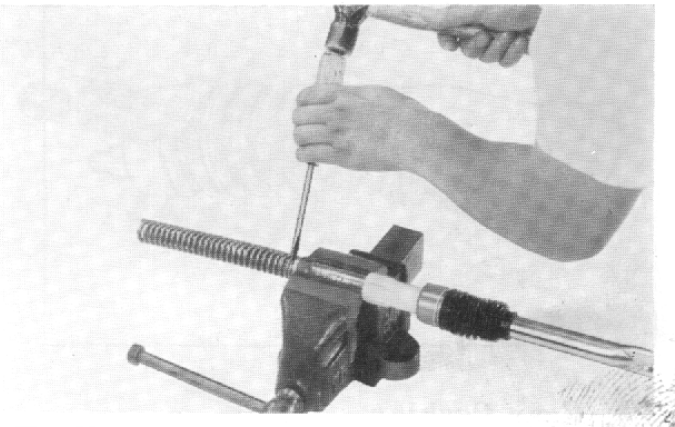

Fig. 66

(6) Pull out the pin which fixes the fork slide pipe, under holder and piston with a pin remover (Tool No. 07053-09801) as shown in Fig. 67.

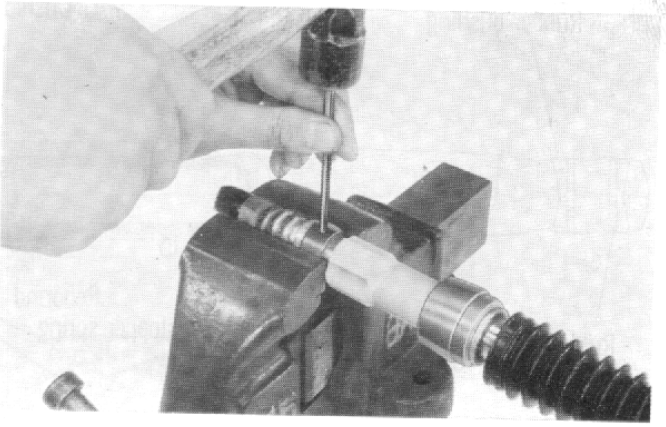

Fig. 67

(7) Fig. 68 shows the disassembled front cushion assembly.

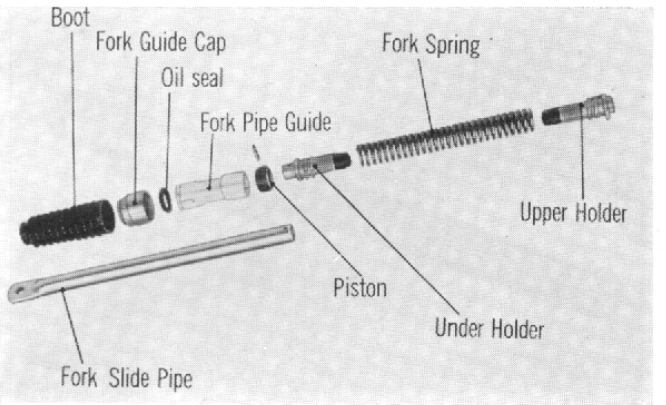

Fig. 68

c. Inspection

(1) Contract the front cushion with both hands from the top as it is assembled as completed and check to see if it functions properly.

(2) Check if any noise developes from the cushions by contracting as above.

(3) Front cushion spring.

	Standard Valve
Load	54 kg/20. 8 mm (118. 6 lb/2. 79 in)
Load	8. 2 kg/10. 8 mm (18. 1 lb/0. 43 in)
Free length	148. 5 mm

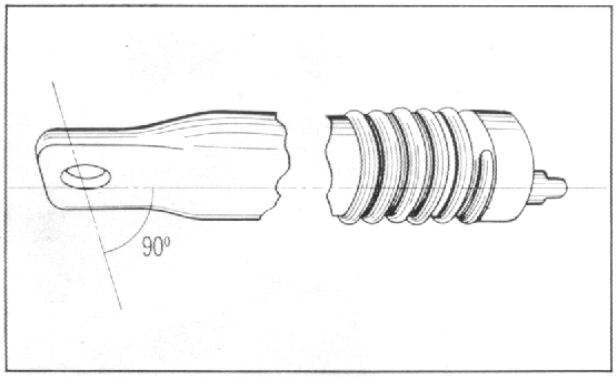

Fig. 69

d. Reassembly can be performed in the reverse order of the disassembly.

(Note)

(1) In assembling the front cushion, it must be so assembled that the lug on the upper holder be perpendicular to the flat part of the fork slide pipe. (Fig. 69)

(2) Apply grease inside the cuhsion housing spring, dust seal, upper and under holders.

(3) When replacing the spring with a new one, grease should be applied on the new parts as above.

(4) In assembling the spring to the upper holder, vinyl tape wounded around the holder apt to result in damage, rewind it with new tape if required.

4.4 Rear Cushion

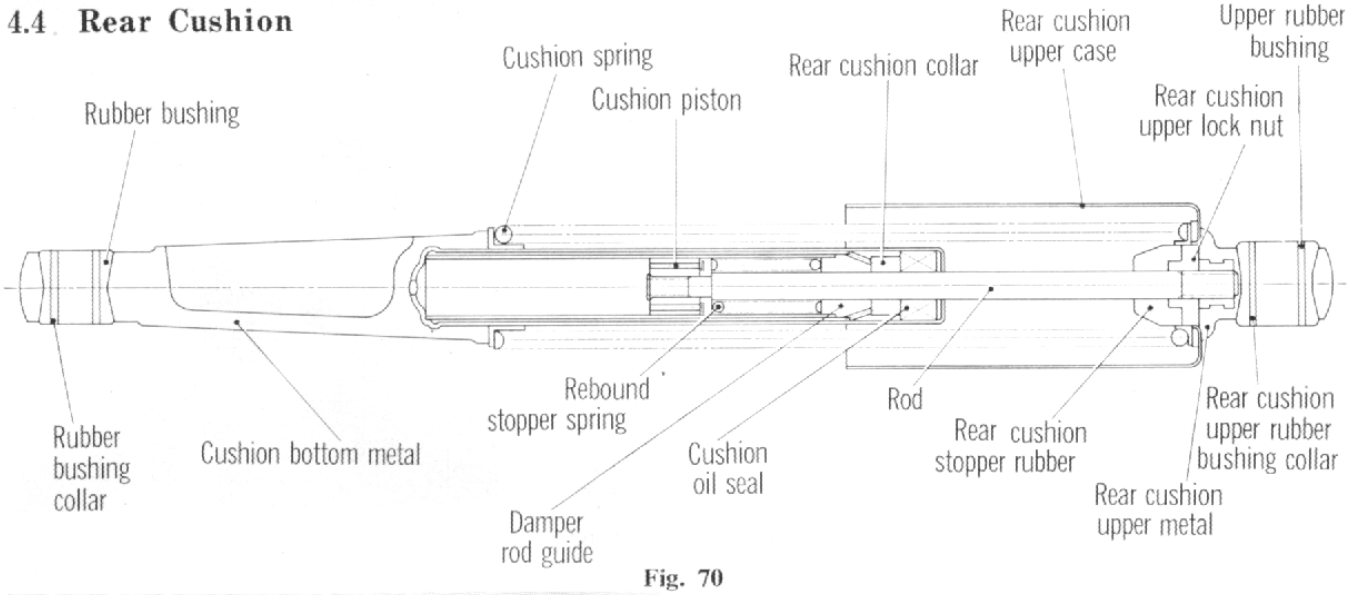

Fig. 70

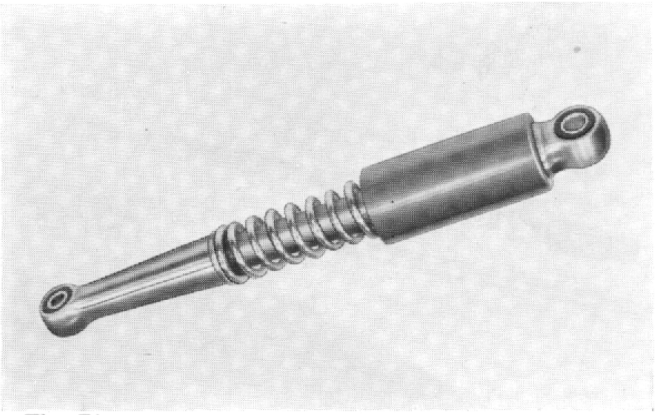

Fig. 71

a. Rear Cushion Construction

The rear cushion connects the frame with the rear fork and absorbs the shock from the rear wheel.

The coil spring having an ununiform pitch is housed in the metal lower case and the upper case which is made of steel pipe, absorbs the shock which comes from the road. The hydraulic damper dampens the reacting exension force. (Fig. 70, 71)

b. Dsiassembly

(1) Remove the rear cushion assembly by loosening the upper and lower cap nuts.

(2) Disassemble the rear cushion component parts with the special tool as shown in Fig. 72. (Tool No. 07035-09800)

c. Inspection

(1) Damping capacity of rear cushion damper 2.79 lb/in/sec. (25 kg/0.5m/sec)

(2) Rear cushion spring

	Standard Value
Free Length	8. 11 in. (205. 9mm)
Load	30. 9 lb/0. 43 in. (14 kg/11. 1 mm)
Load	138. 9 lb/1. 97 in. (63 kg/50 mm)
Load	220. 5 lb/2. 71 in. (100 kg/68. 8 mm)

d. Reassembly

After reassembly, operate the rear cushion with hand to assure that there is no binding between the spring and the case and no noise which comes from the cushion.

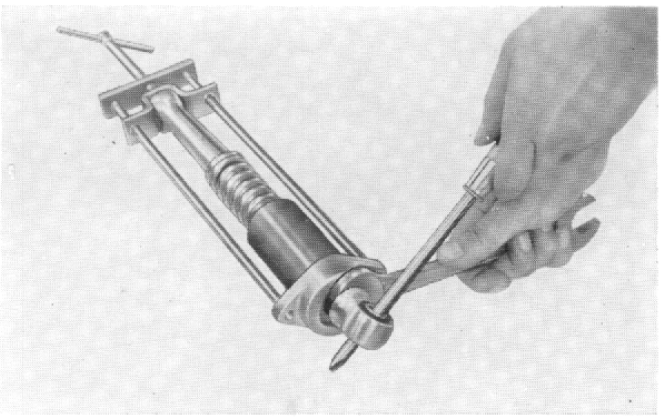

Fig. 72

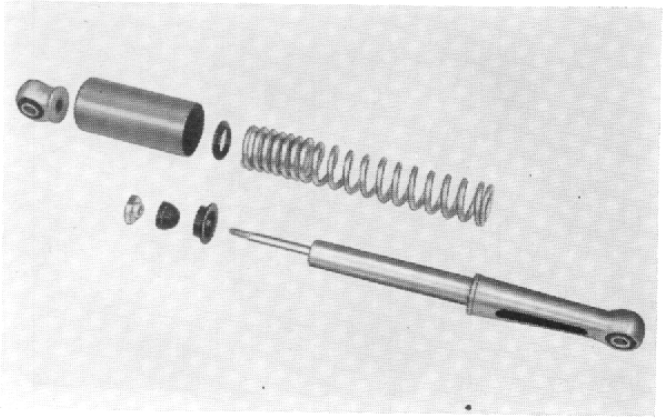

Fig. 73

4.5 Front Wheel

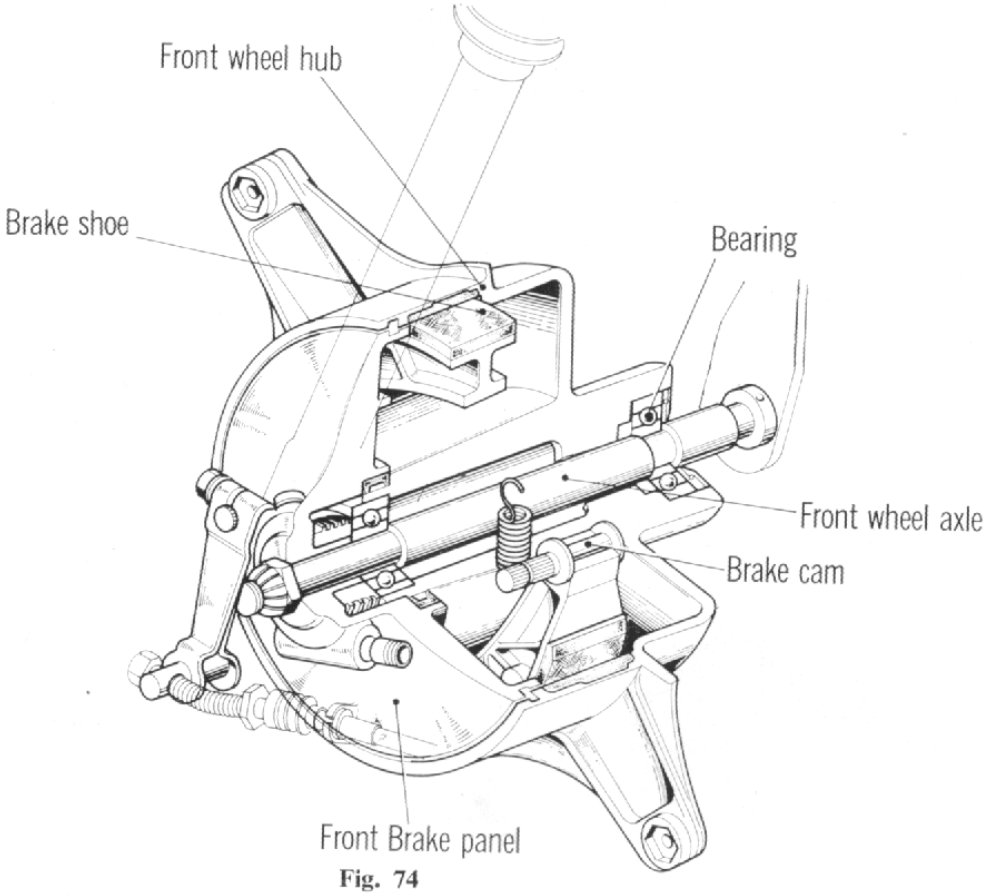

Fig. 74

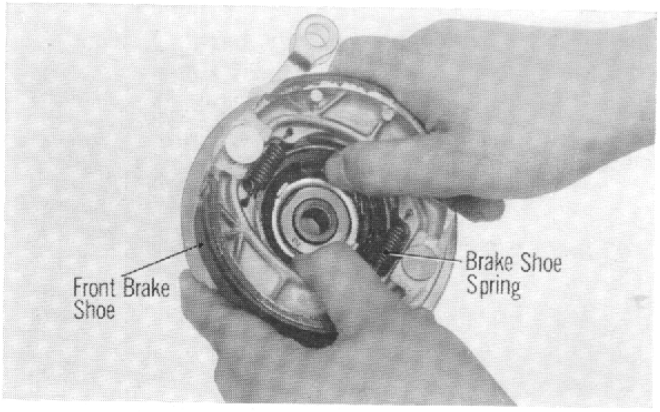

Fig. 75

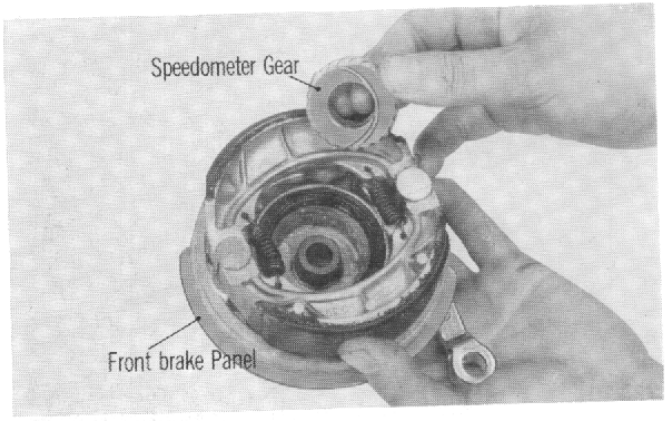

Fig. 76

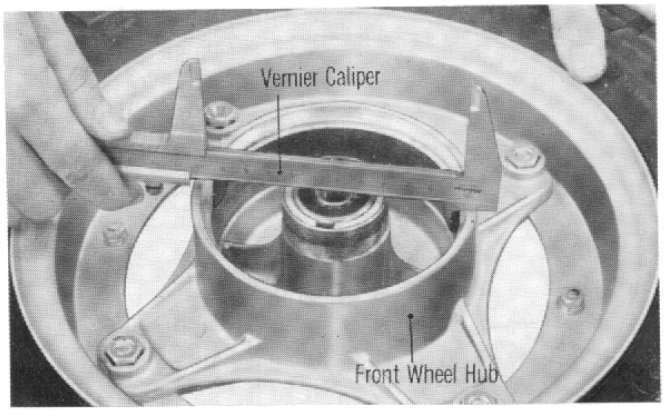

Fig. 77

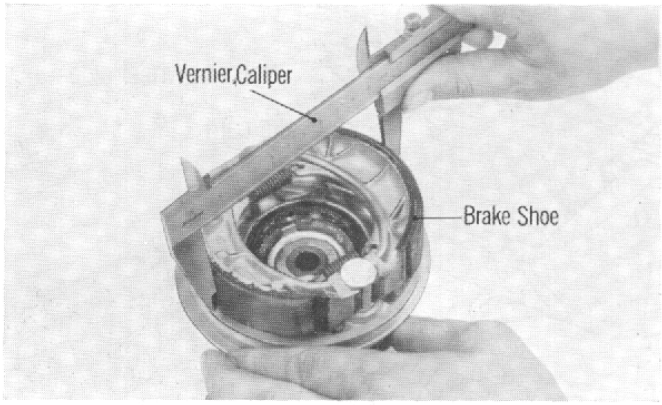

Fig. 78

a. Front Wheel Construction

The front wheel axle and the axle nut assemble the cast aluminum alloy hub with the cast brake drum and two 63010 ball bearings with the front brake panel consisting of brake shoes and a speedometer gear. Different from the other types of this model, which has wire spokes, a front wheel hub which is made of aluminum alloy cast, is directly connected with the combined type of rim. And a labyrinth is incorporated in the brake panel and the wheel hub to prevent entry of water and dust into the hub interior.

b. Disassembly

(1) Place an adequate stand under the engine to raise the front wheel.

(2) Remove the front brake cable and the speedometer cable.

(3) Remove the axle nut and pull out the front wheel axle shaft and the front brake panel can be removed as a unit.

(4) The brake shoe is fixed in place with the brake shoe spring; therefore spread the brake shoes apart and remove from the panel. (Fig. 75)

(5) Remove the front brake cam and the speedometer gear from the front brake panel.

(6) Remove the tire and tube from the rim using a tire lever and pull out the tube from the tire.

Caution:

When removing the front hub from the rim, be sure to deflate air first then remove it.

c. Inspction

(1) Check brake drum inside diameter. (Fig. 77)

inch (mm)

	Standard Value	Serviceable Limit
Inside Diameter	4.33±0.08 (110±0.2)	Replace if over 4.35 (110.5)

(2) Check brake shoe outside diameter. (Fig. 78)

inch (mm)

	Standard Value	Serviceable Limit
Outside Diameter	$4.291^{+0}_{-0.118}$ $\left(109.5^{+0}_{-0.3}\right)$	Replace if under 4.153 (105.5)

(3) Check front axle diameter for bend. (Fig. 79)

inch (mm)

	Standard Value	Serviceable Limit
Diameter	$0.400^{-0}_{-0.002}$ $\left(10^{-0}_{-0.050}\right)$	———
Bend	0.008 in (0.2)	Repair or replace if over 0.02 (0.5)

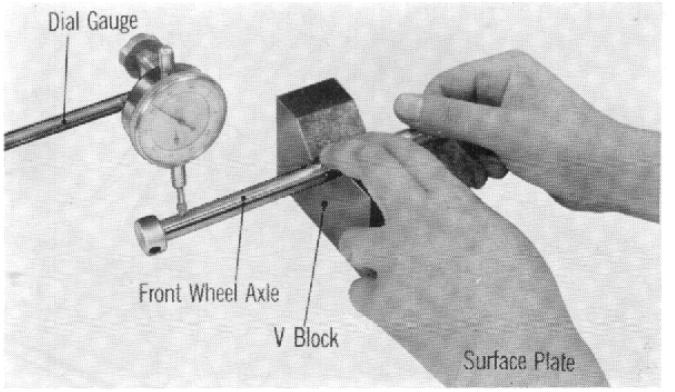

Fig. 79

c. **Reassembly**

(1) After reassembly of the tire, fill the tire with air to about 1/3 of the specified pressure and tap the tire all around with a soft faced hammer to eliminate any tube twist or pinching. (Fig. 80)

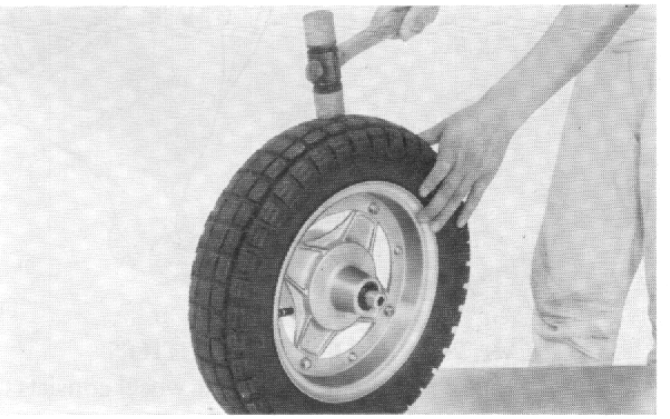

Fig. 80

(2) The valve stem must be pointed toward the axle, improperly seated valve stem may cause air leak. (Fig. 81)

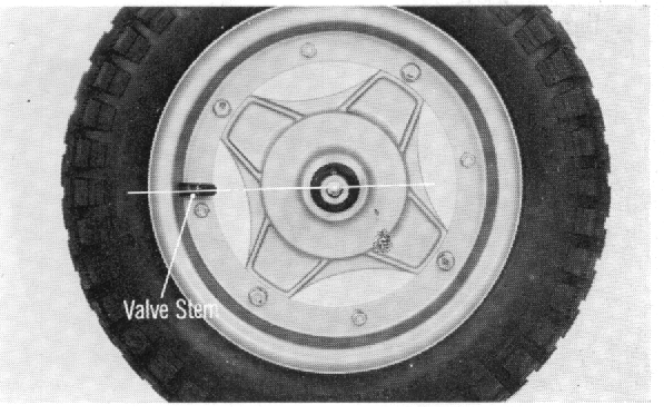

Fig. 81

(3) Wash the old grease from the wheel hub and the bearing, and pack with new grease. Also fill the hub with grease and install the distance collar, followed by installation of the 63010 ball bearings (Fig. 82) (tool No. 07048-09801)

(4) After installing the bearings, reassemble the front wheel and the brake shoe in the reverse order of disassembly.

(5) Install the brake cable and adjust the brake lever play.

TIRE AIR PRESSURE

Front air pressure 15.65~18.5 ld (1.1~1.3 kg/cm²)

Rear air pressure 18.5~21.3 ld (1.3~1.5 kg/cm²)

Fig. 82

4.6 Rear Wheel

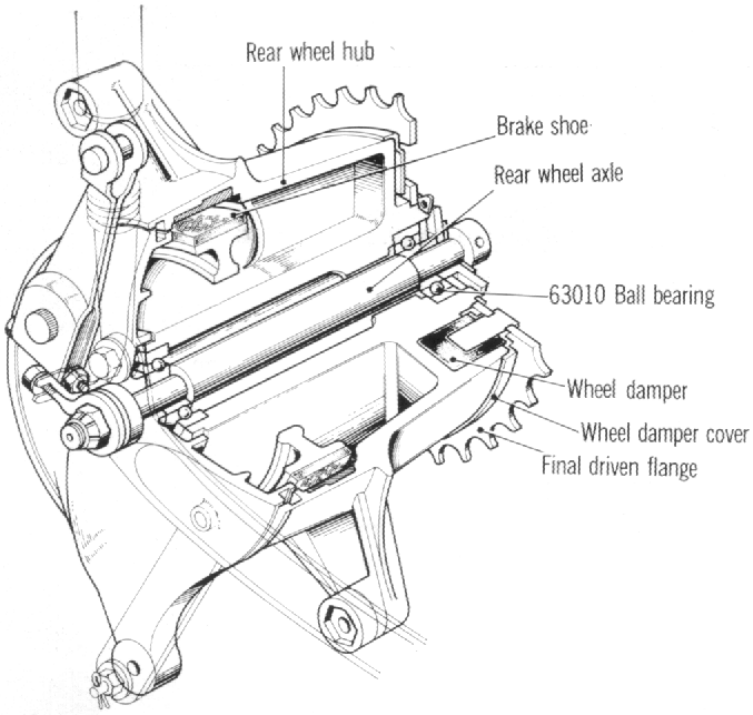

Fig. 83

a. REAR WHEEL CONSTRUCTION

Similar to the front wheel, the rear wheel consists of a cast aluminum alloy rear wheel hub incorporating ball bearings, and a brake panel. A tire size (ST 50/70 3.50-10-2PR, CT 70 4.00-10-2PR) is used with the combined type of the rim which is directly connected with the hub.

In addtion, the rear wheel hub and the final driven flange have been made into an integral component for lightness.

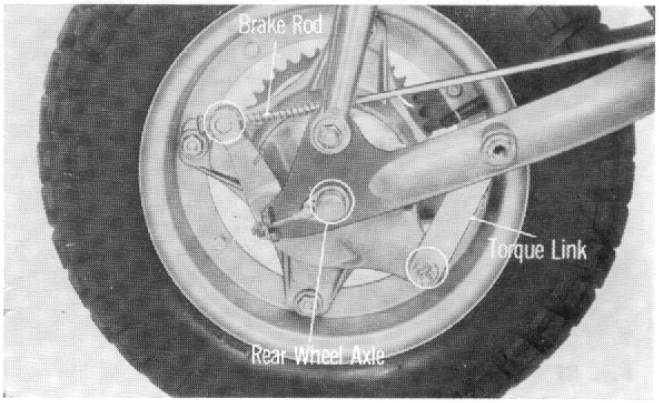

Fig. 84

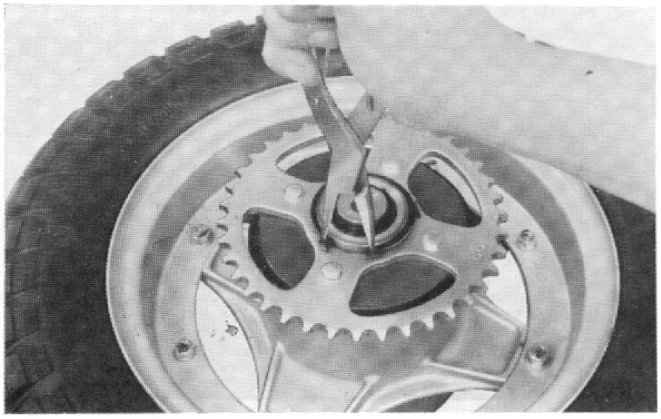

Fig. 85

b. Disassembly

(1) The disassembly of the rear wheel can be performed without removing the muffler.

(2) Disconnect the drive chain.

(3) Remove the brake adjusting nut and separate the brake rod from the rear brake arm.

(4) Separate the rear brake torque link from the brake panel.

(5) Remove the rear wheel axle by removing the axle nut and then rear wheel may be removed with the driven sprocket combined. (Fig. 84)

(6) Remove the snap ring with a snap ring plier to separate the driven sprocket from the hub. (Fig. 85)

c. Inspection

(1) In the same manner as the front wheel, the brake drum inside diameter and the brake shoe out side diameter should be checked to the same standard.

(2) Check the brake lining for wear in thickness.
Standard value; 0.1378 in. (3.5 mm)
Serviceable limit; Replace if under 0.0590 in. (1.5 mm) Fig. 86.

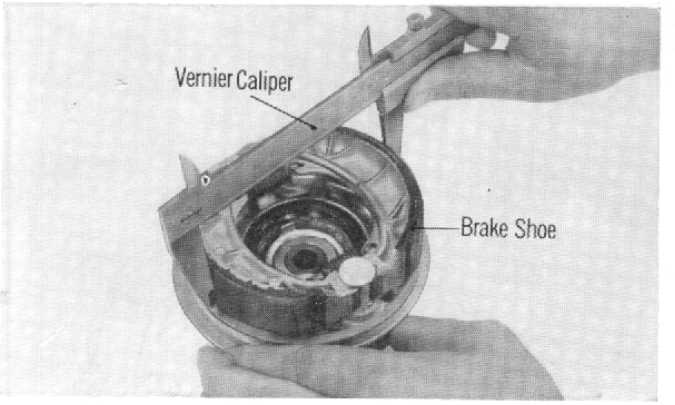

Fig. 86

(3) Check the rear axle diameter for wear and bend in the same manner as the front axle shaft. (Fig. 87)

inch (mm)

	Standard Value	Serviceable Limit
Axle Diameter	0.4704~0.4720 (11.957−11.984)	——
Bend	0.008 (0.2)	Repair or replace if over 0.02 (0.5)

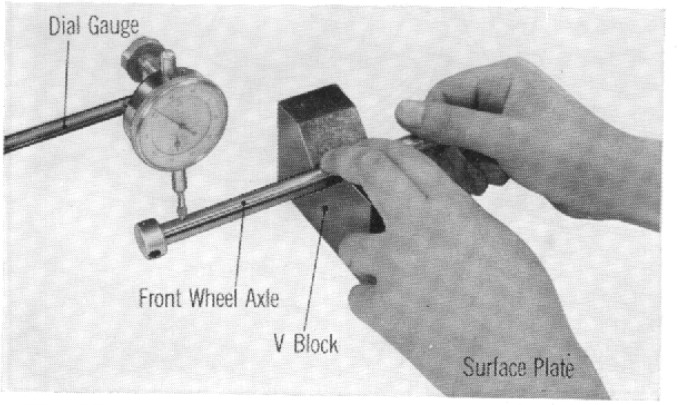

Fig. 87

(4) Wash and clean all ball bearings. Check the bearing for wear and for roughness by rotating the bearings. Replace any defective bearings if required.

(5) Check the brake shoe spring for loss of tension, check the oil seal for any damaged or deformed lips, and check the O ring for damages and loss of tension. Replace any defective parts if required. Inflate the tire and check for air leaks. Check the tire casing for imbedded nails, wires and other foreign objects. Use one or two spreaders to assist in the internal surface inspection of the tire. (Fig. 88)

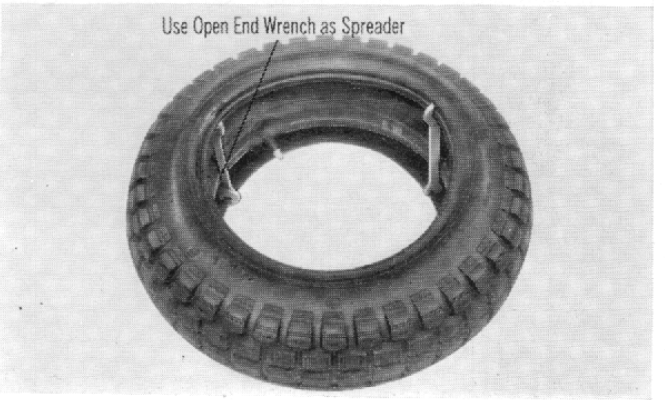

Fig. 88

d. Reassembly

(1) Install the tire and tube in the same manner as the front wheel.

(2) Reassembly the rear wheel to the frame and fix in place with the axle and the axle nut.

(4) Reinstall the rear brake rod and adjust the play with the adjusting nut.
Standard play of brake lever
0.787~1.181 in (2~3 cm)

(5) Inflate the tire to the specified air pressure. Normal condition:
Front: 15.7~18.5 lb
(1.1~1.3 kg/cm²)
Rear: 18.5~21.3 lb
(1.3~1.5 kg/cm²)

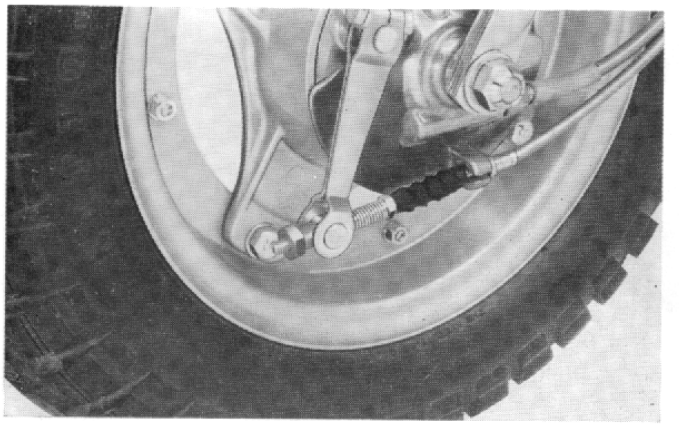

Fig. 89

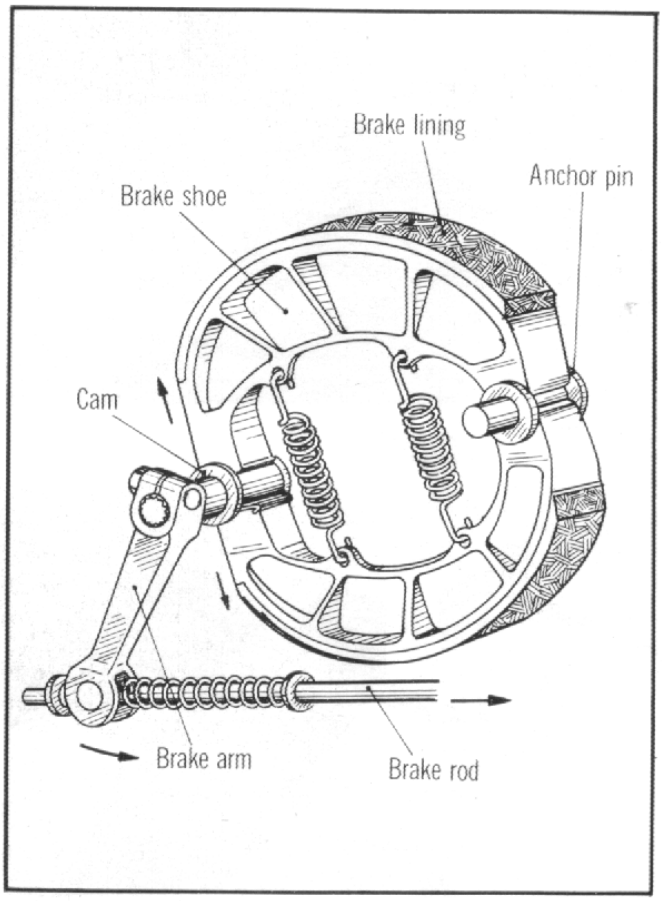

Fig. 90

4.7 Braking System

Reliability as well as durability of the braking system is an essential requirement for safe riding. The braking system which is adopted is an outward expanding type having 4.340 in (110 mm) diameter. The wheel hub is made of light weight alloy casting which excels in heat dissipating characteristic and the brake lining contact surface is a cast iron ring.

In operation, the action of the brake lever or the foot pedal forces the cam to be rotated, and this in turn forces the brake shoes, with the anchor pin as the pivot, to move outward and come in contact with the brake drum. Thus the lining on the brake shoes is forced against the brake drum, and the friction between the brake drum and brake shoes stops the rotating wheel. With the lever released, the brake shoes return to their original position by means of two springs which hold the shoes inward. (Fig. 90)

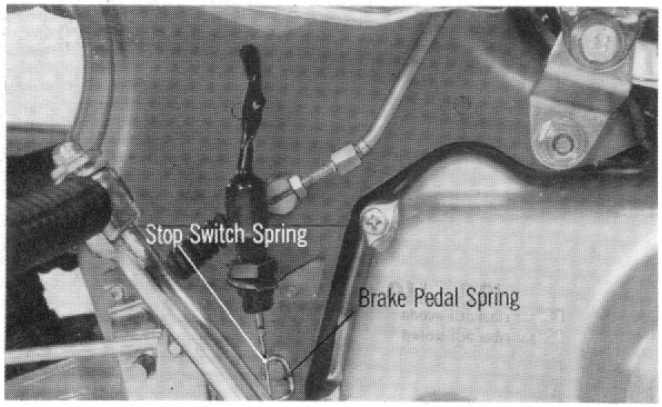

Fig. 91

a. Disassembly

(1) Remove the exhaust pipe and the muffler.

(2) Remove the brake rod from the brake arm by loosening the brake adjusting nut, then hook off the brake pedal spring and stop switch spring. (Fig. 91)

(3) Remove the drive chain cover.

(4) Disconnect the rear brake cable from the rear brake arm.

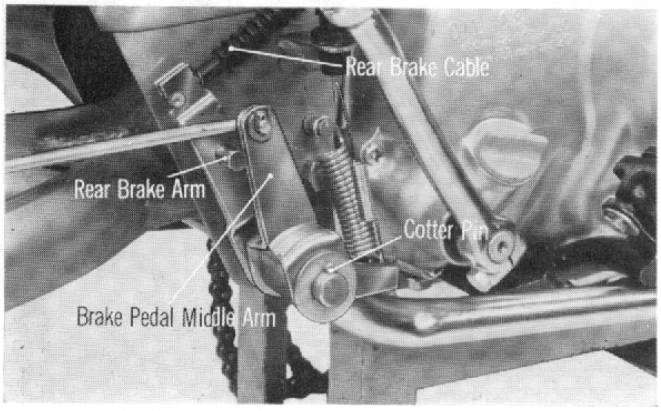

Fig. 92

(5) Pull out the cotter pin.

(6) Extract the brake pedal middle arm, brake pedal and rear brake arm with a washer from the brake pivot pipe. **(Fig. 92).**

(7) Remove the step bar from the crankcase by removing the 8 mm hex. bolts. **(Fig 93)**.

b. Inspection

(1) Inspect the brake pedal spring for loss of tension and corrosion. If loss of tension or corrosion is excessive, the spring should be replaced.

(2) Check the brake pivot pipe for bend. If excessively bent, repair it by hitting with a hammer.

(3) Check the cotter pin for damage.

(4) Adjust the brake pedal play to 0.787~1.181 in. (2~3 cm)

(5) Check the brake pedal and step bar for deformitiy and repair or replace with new parts if necessary.

c. Reassembly

(1) Clean all parts and lubricate the brake pedal pivot pipe with grease before reassembly. Reinstall the rear brake arm, brake pedal middle arm and brake pedal to the pivot pipe.

(2) Hook the brake pedal spring, and stop switch spring on the specified position. Connect the rear brake cable to the rear brake arm.

(3) Reinstall the step bar on the crankcase with four 8 mm hex. bolts. **(Fig. 94)**.

(4) Reinstall the muffler.

(5) After connecting the rear brake, adjust the brake pedal play to 0.787~1.181 in. (2~3 cm)

4.8 Rear Fork

The rear fork is of a swing arm type which pivots on the rear fork pivot bolt. The rear end of the fork is supported by the frame through the rear cushions.

a. Disassembly

(1) Remove the rear wheel in accordance with section "Rear wheel".

(2) Disconnect the drive chain.

(3) Remove the 10 mm cap nuts fixing the rear cushion at the lower end.

(4) Remove the rear fork pivot bolt by loosening the rear fork pivot nut, then the rear fork can be removed from the frame. **(Fig. 95)**.

b. Inspection

(1) Check the pivot rubber bushing for damage or aging and also for looseness in the fork. Replace defective bushing if required. **(Fig. 96)**

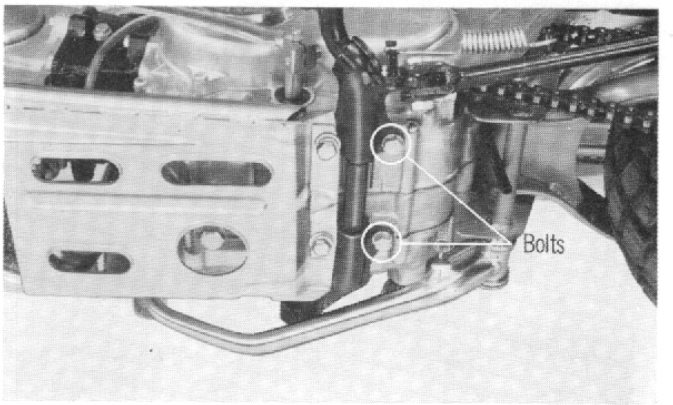

Fig. 93

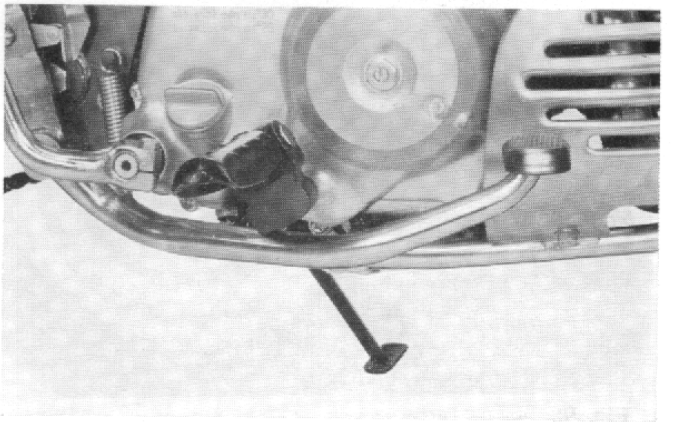

Fig. 94

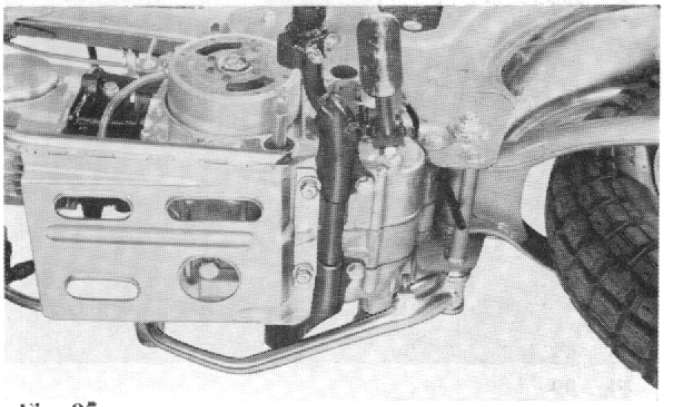

Fig. 95

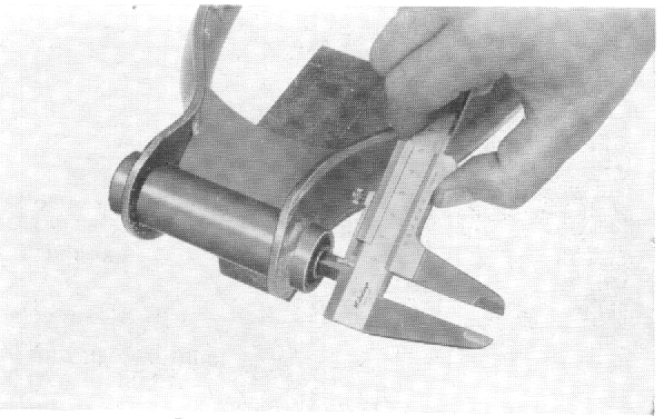

Fig. 96

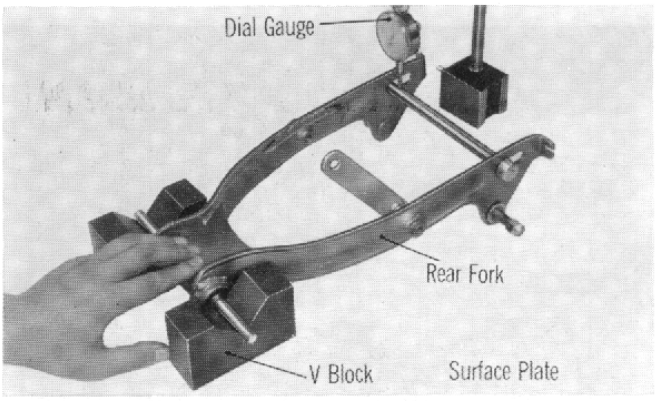

Fig. 97

(2) Check the rear fork for twist and deformation. If twist is over 0.040 in. (1 mm) or the part is defective, replace with a new part. **(Fig. 97)**

(3) After reassembly, check L and R chain tension adjuster, they should both be set to the same aligment marks. Improper adjustment will affect the steerability. (Fig. 99)

c. **Reassembly**

The reassembly of the rear fork will be performed in the reverse order of the disassembly.

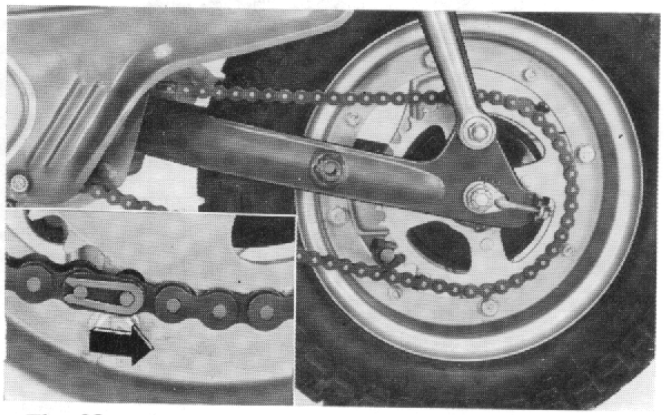

Fig. 98

4.9 Drive Chain

(1) The drive chain should be so connected that the closed end of the link clip should point toward the direction of the normal chain rotation.

(2) Inspect the drive chain for wear and damages. **(Fig. 98)**

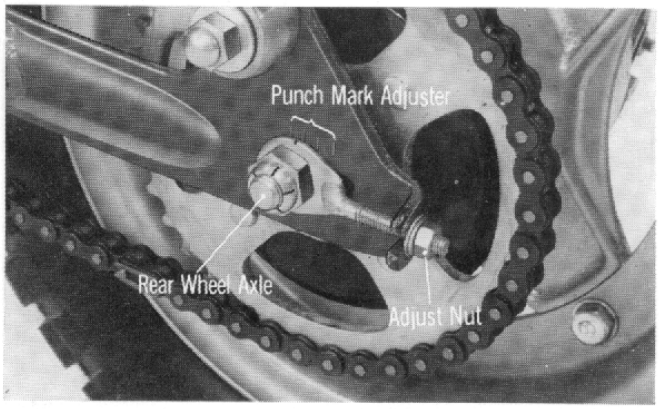

Fig. 99

(3) Whenever the drive chain has been removed or adjusted, the location of the alignment punch mark on the adjuster in respect to the marking on the rear fork must be the same on the both sides.

The chain slackness should be adjusted to 0.040~0.080 in. (1~2 cm.)

The chain must be replaced if it can be no more adjusted by the adjuster because it becomes excessively loose.

4.10 Air Cleaner

The air cleaner case is mounted on the engine hung from the frame. As an air cleaner element, foamed polyurethane is utilized, but in order to provide more effective filtering ability, this cleaner element is used with oil dipped.

(1) The air cleaner element can be removed by loosening the cap nut.

(2) A clogged air filter should be cleaned with gasoline and compressed air.

(3) Whenever the air filter element is replaced or cleaned, immerse it with oil specified as SAE 10 W 30 and then wring with hand lightly so that approximately 20 gr. of oil will be thus soaked.

Fig. 100

5. FLYWHEEL A. C. GENERATOR AND IGNITION COIL

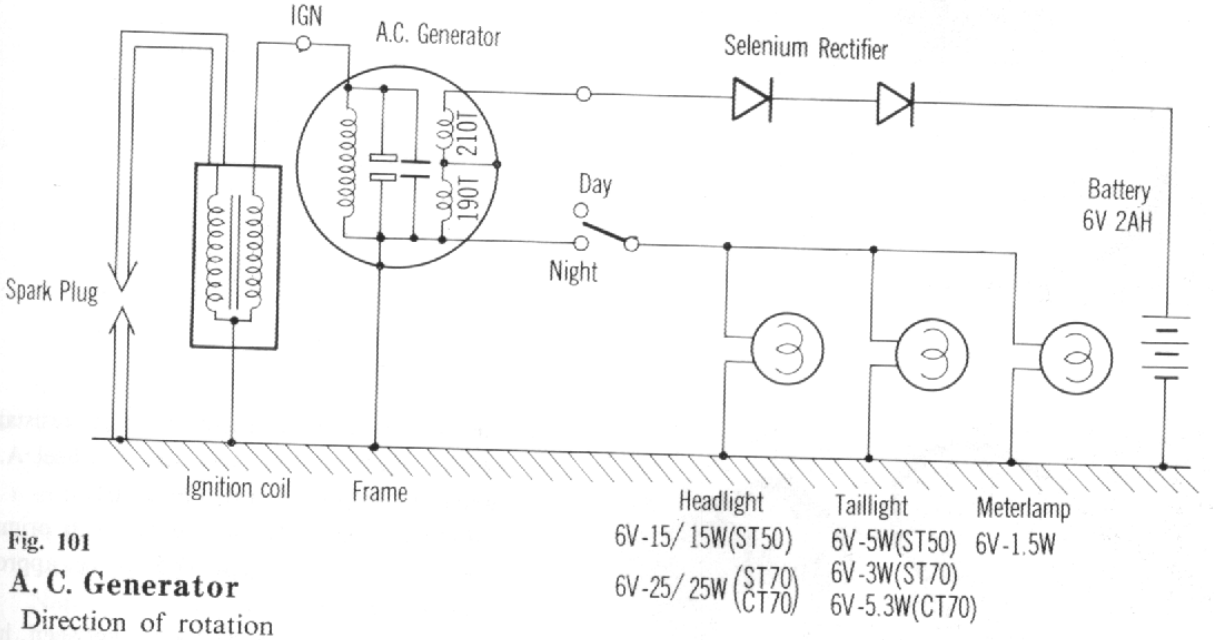

Fig. 101

5.1 A. C. Generator

(1) Direction of rotation
Left hand rotation when viewed from the installing postion.

(2) Charging performance
Selenium rectifier (half-wave rectification), 6 V, 2 AH battery used. (Terminal voltage 6. 5 V)
Charge starting at 1000 R.P.M. at day time.
Charge starting at 1000 R P.M. at night.

(3) Night operating load
Ignition coil+15 W+3 W+1. 5 W
Charging rate : 0. 4±0. 2 A at 4000 rpm
0. 7±0. 3 A at 8000 rpm

(4) Day operating load
Ignition
Charging rate : 1. 5±0. 3 A at 4000 rpm
2. 4±0. 3 A at 8000 rpm

Item	Specification
Sparking performances (assembled coil)	Over 6 mm with 3 needle spark gap, at 3000 rpm Over 8 mm with 3 needle sparkgap, at 8000 rpm~11, 000 rpm
Lighting performance	With 15 W+3 W+1. 5 W load connected over 5. 2 V at 2. 500 rpm below 9, 0 V at 8000 rpm
Charging performance Day operation Night operation	 Charge starting at below 1. 000 rpm at day time Charge starting at below 1. 000 rpm at night
Breaker	Contact pressure 750±100 g, point gap 0. 35±0. 05 mm (0. 020±0. 0020 in)
Governor	Advance 25° (constant)

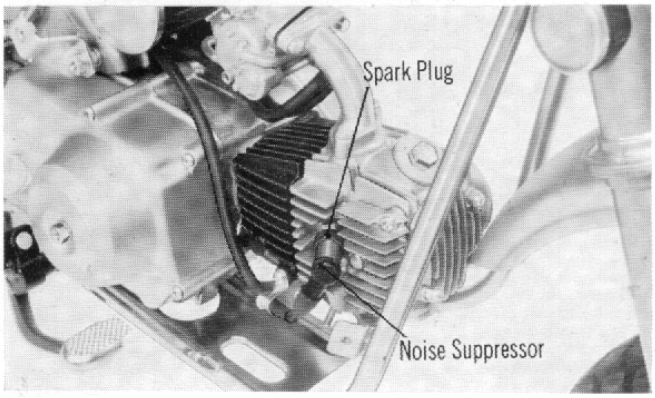

Fig. 102

5.2 Inspecting sparking performance

The flywheel A. C. generator and an externally mounted ignition coil is equipped. A simple method of determing serviceability of the ignition coil is made by the following methods.

(1) The most simple method is to remove the spark plug and perform the starting procedure with the spark plug grounded to the engine. When a strong spark of bluish white color is produced, it is an indication of satisfactory ignition coil and flywheel A. C. generator (Fig. 102).

If no or weak spark is produced, it is an indication of defective primary coil of either the ignition coil or flywheel A. C. generator.

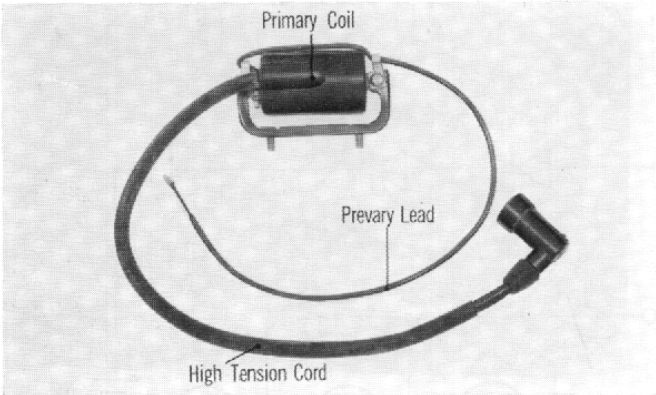

Fig. 103

Fig. 104

(2) Another method is to measure the resistance of the ignition coil and the flywheel A. C. generator primary coil. (Fig. 104)

1. Primary coil: Resistance between primary black leads and case should be approximately 2.3~2.1 Ω.
2. Secondary coil: Resistance between high tension lead and ground should be approximately 9~11 Ω.

When the resistance measurement across the flywheel A. C. generator primary coil is approximately 1. 3 Ω lower than the above value, the cause may be a short or grounding; an infinite resistance would indicate an open circuit.

Caution:

Resistance measurment of the primary coil must be made with the breaker points opened and the condenser lead wire disconnected because a leaky condenser will give an improper indication.

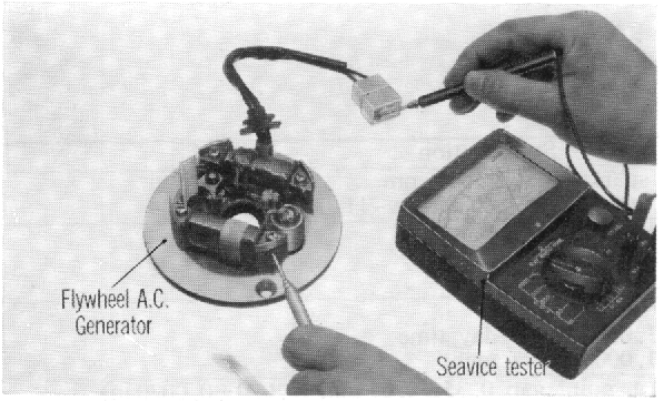

Fig. 105

(3) Inspecting the selenium rectifier

a. Disconnect the lead wire from the rectifier terminal.

b. Measuring in the normal direction. Connect the ⊕ side of the tester "X" terminals and the white lead of the selenium rectifier with test lead, connect the ⊖ side of the tester "X" terminals and the red lead of the rectifier and then measure the resistance.
The selenium rectifier is in good condition in the normal direction if it measures less than 30Ω **(Fig. 106)**

c. Measuring in the reverse direction. Perform the measurement in the same manner as for the normal direction measurement but with the tester "X" terminals connected in reverse, the ⊖ connected to the white lead of the selenium rectifier and the ⊕ side to the red lead of the rectifier. The selenium rectifier is in good condition in the reverse direction if it measures over 2000Ω **(Fig. 107)**
When the above test is performed the tester must be so set that the internal resistance within the tester be 100 Ω

(4) Checking the condition of the selenium rectifier as described above, the low resistance in the normal direction and a high resistance in the reverse direction indicates a good condition of the selenium rectifier.
Note:
The service tester will give a condition indication of the selenium rectifier, however, since the true characteristics will vary with the applied voltage and wave form, an electrical test should be performed by a specialist in accordance with the specification.

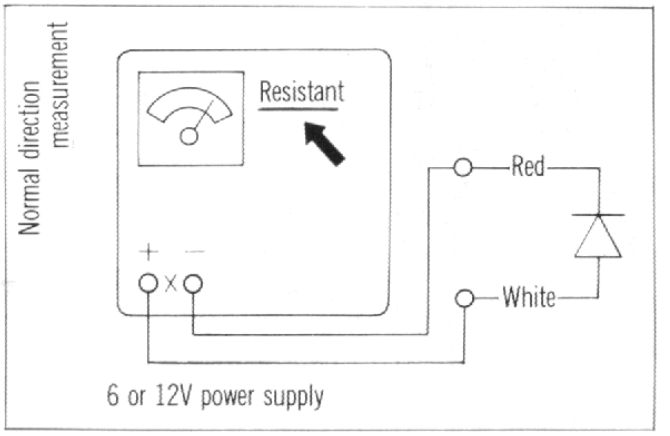

Fig. 106

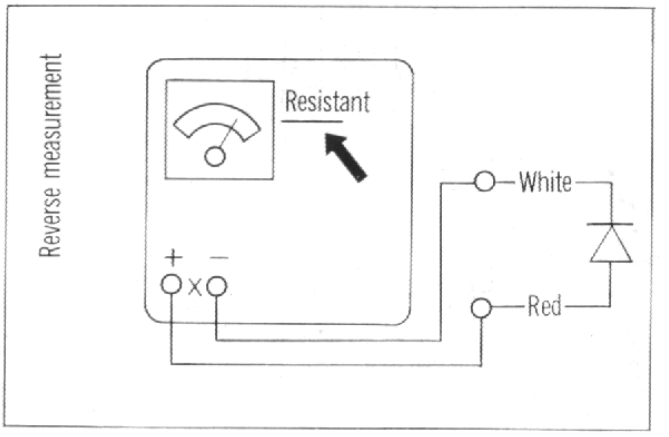

Fig. 107

6. WIRING DIAGRAM

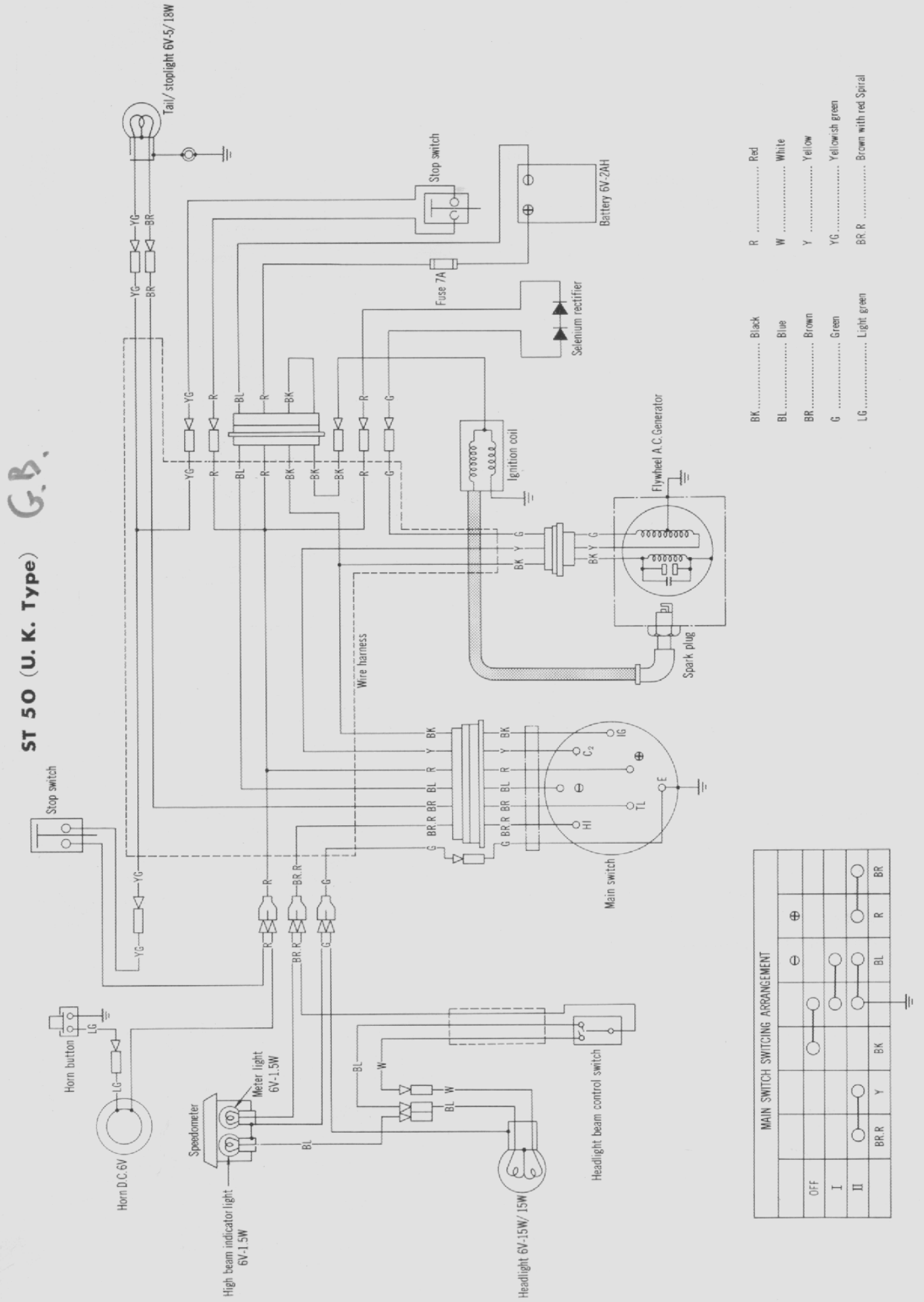

ST 70-I (General Export Type)

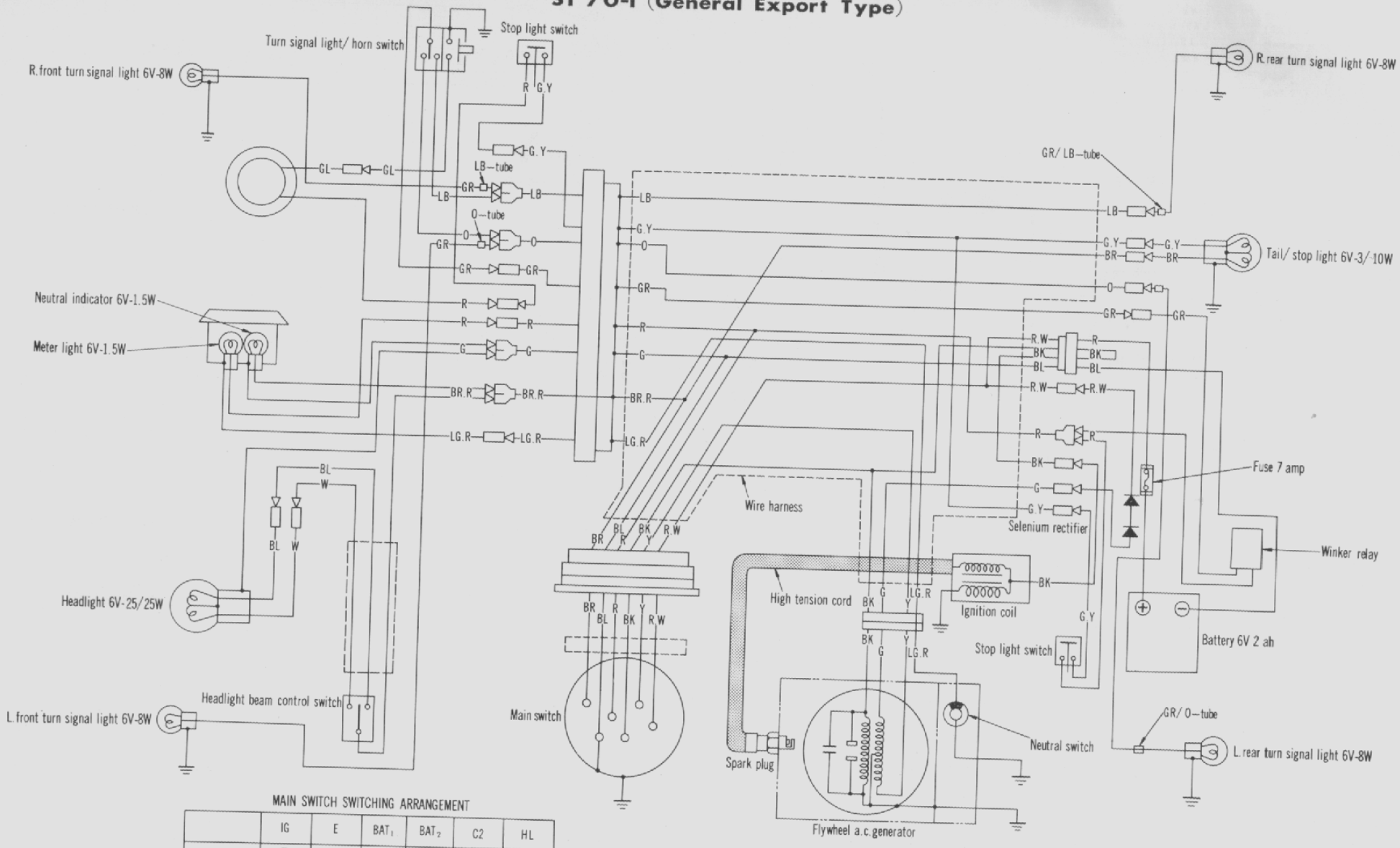

MAIN SWITCH SWITCHING ARRANGEMENT

	IG	E	BAT_1	BAT_2	C2	HL
OFF	○	○				
I			○	○		
II			○	○	○	○

BK	Black	LG	Light green
BL	Blue	O	Orange
BR	Brown	R	Red
G	Green	W	White
GR	Gray	Y	Yellow
LB	Light blue		

ST 70-II (Geenral Export Type)

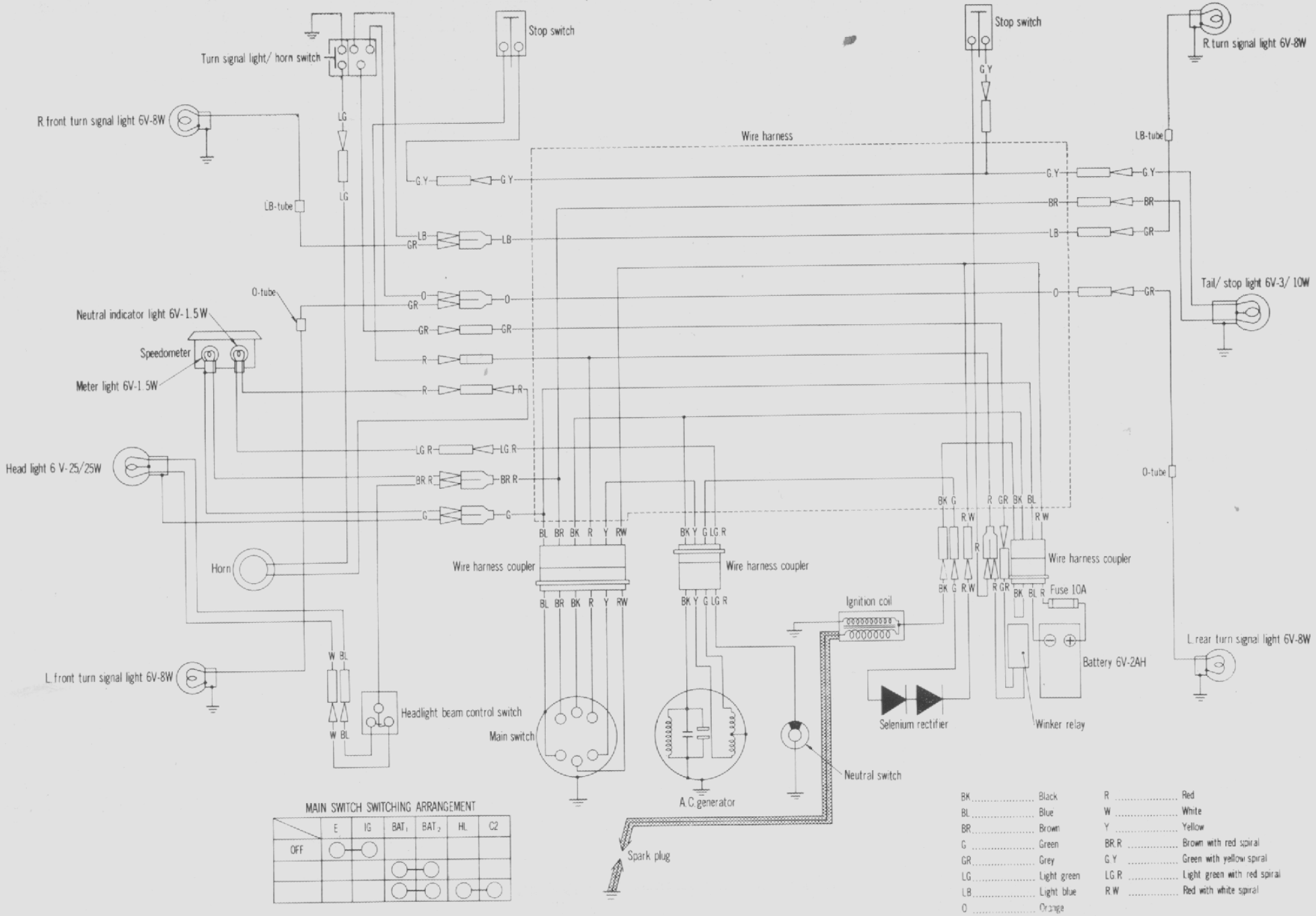

CT 70 (U.S.A. Type)

Wiring Diagram

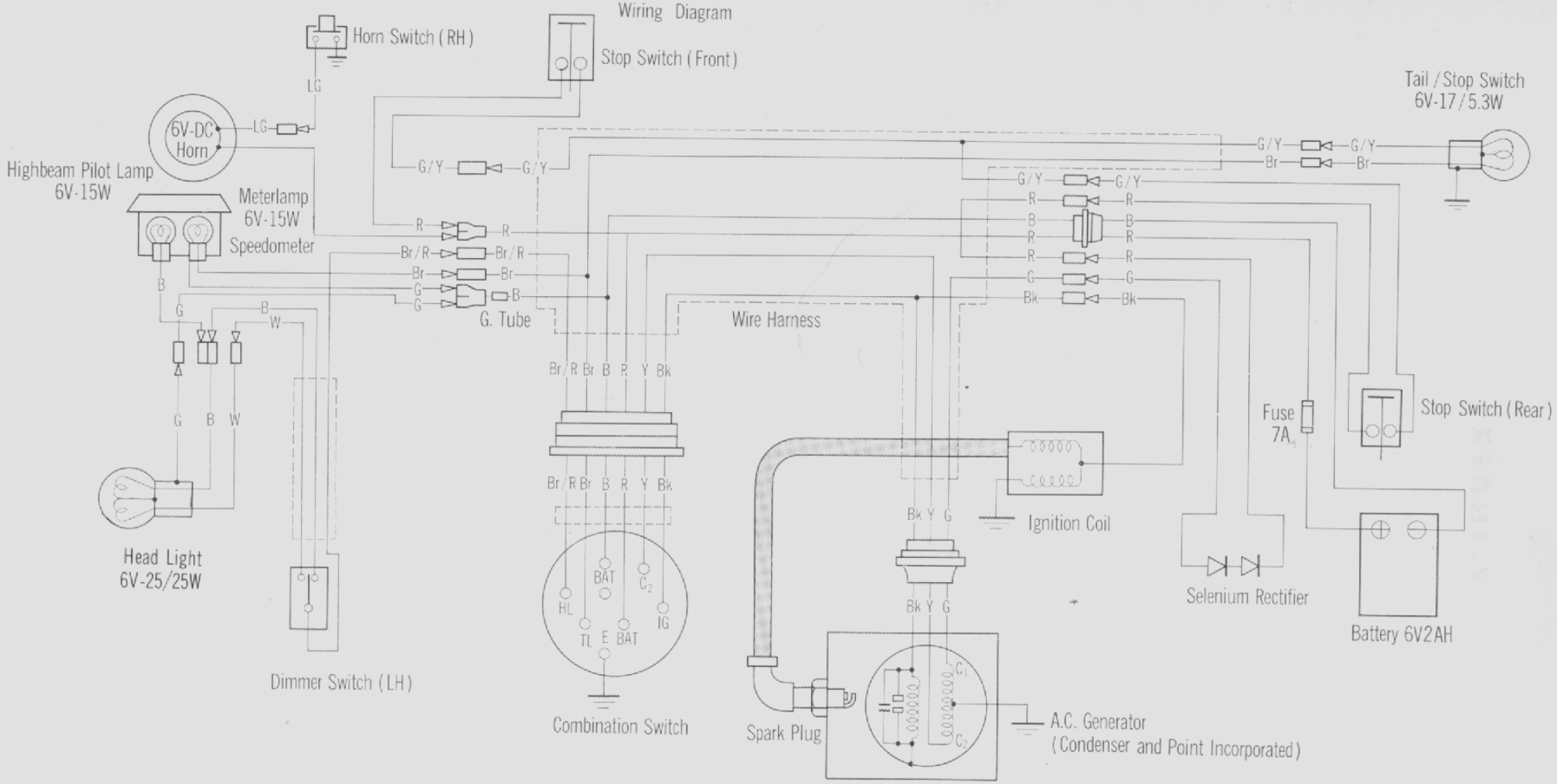

	Combination Switching diagram						
	HL	C_2	IG	E	BAT ⊖	BAT ⊕	TL
OFF			○—○				
I				○—○			
II	○—○			○—○		○—○	
Cord Color	BR/R	Y	BK		B	R	R

W	White	LB	Light Blue
B	Blue	LG	Light Green
O	Orange	Y/R	Yellow / Red
Y	Yellow	LG/R	Light Green / Red
Gr	Grey	B/R	Blue / Red
Bk	Black	Bk/W	Black / White
G	Green	Br/W	Brown / White
R	Red	Y. Tube	Yellow Tube
Br	Brown	LG. Tube	Light Green Tube
P	Pink	R. Tube	Red Tube
HCS	Headlight Control Switch		

7. INDEX