SHOP MANUAL

HONDA

CF50,70

PREFACE

This SHOP MANUAL has been prepared as a "SERVICE GUIDANCE" for the mechanic responsible for the upkeep of the HONDA CF50/70. It is compiled into six sections and summarizes the procedures for disassembling, inspecting and reassembling the components of the machine. Strict adherence to the instructions given herein will result in better, safer service work.

HONDA MOTOR CO., LTD.

Service Publications Office

ALL INFORMATION, ILLUSTRATIONS, DIRECTIONS AND SPECIFICATIONS INCLUDED IN THIS PUBLICATION ARE BASED ON THE LATEST PRODUCT INFORMATION AVAILABLE AT THE TIME OF APPROVAL FOR PRINTING. HONDA MOTOR CO., LTD. RESERVES THE RIGHT TO MAKE CHANGES AT ANY TIME WITHOUT NOTICE AND WITHOUT INCURRING ANY OBLIGATION WHATEVER.

NO PART OF THIS PUBLICATION MAY BE REPRODUCED WITHOUT WRITTEN PERMISSION.

CONTENTS

I. SERVICE PRECAUTIONS 1
II. INSPECTION AND ADJUSTMENT 2
1. Tappets 2
2. Contact Breaker Point Gap and Ignition Timing 2
3. Carburetor 3
4. Clutch 4
5. Cam Chain 4
6. Engine Oil 4
7. Front Brake 5
8. Rear Brake 6
9. Air Cleaner 6
10. Drive Chain 6
III. ENGINE 7
1. On-Frame Service 7
2. Engine Removal and Installation ... 7
3. Cylinder Head, Cylinder and Piston 9
4. Clutch, Oil Pump and Gear Shift Mechanism 14
5. Flywheel A.C Generator and Cam Chain Tensioner 18
6. Crankshaft, Transmission, Gear Shift Forks and Kick Starter Spindle 19
7. Carburetor 22
IV. FRAME 26
1. Front Wheel and Front Brake 26
2. Rear Wheel and Rear Brake 28
3. Handlebar, Front Fork and Front Shock Absorber Assemblies 30
4. Rear Suspension 33
5. Frame Body and Other Equipments · 34
V. ELECTRICAL SYSTEM 37
1. Charging System 37
2. Ignition System 39
3. Electrical Parts 40
VI. SERVICE DATA 42
1. Tightening Torque Standard 42
2. Technical Service Data 43
3. Trouble Shooting 46
4. Maintenance schedule 51
5. Specifications 52
6. Special Tools 54
7. Wiring diagram 56

I. SERVICE PRECAUTIONS

1. Always use new gaskets, O-rings and cotter pins whenever reassembling.
2. When tightening bolts or nuts for which sequence is not specified, begin on center or larger diameter bolts and tighten them in a criss-cross pattern to specified torque in two or more steps if necessary.
3. Use genuine HONDA parts and lubricants or those recommended by HONDA.
4. Use special service tool where so specified.
5. Clean engine parts in or with cleaning solvent upon disassembly. Apply lubricant to their sliding surfaces when reassembling.
6. Coat or fill parts with grease where specified as such.
7. Upon assembling, check every possible part for proper installation and movement or operation.
8. When working with others, try to give a signal or communicate for safety.

Notes

1. The procedures for reassembling the engine and frame parts are not described. Follow the reverse of disassembling procedures carefully observing the titles "**Assembly**" in each section.
2. All the service data for each component are compiled on the last pages of this manual.

II. INSPECTION AND ADJUSTMENT

This section covers the inspection and adjustment of important ones of the items involved in the MAINTENANCE SCHEDULE on page 51. For other items, see the paragraph for "Inspection" of each group.

1. Tappets

Adjustment of the tappet clearance should be made while the engine is cold.

1. Remove the tappet hole caps and generator cover.
2. Turn the generator rotor counterclockwise until the "T" mark on the rotor is aligned with the index mark. At this position the piston will be at the TDC (top dead center) position on the compression stroke or on the exhaust stroke. The tappet clearance should be adjusted with the piston at the TDC on the compression stroke. Move the intake and exhaust rocker arms and if there is any free movement, the piston is at the TDC position on the compression stroke. If there is no such a movement and the valves are open, further turn the rotor one turn to align the "T" mark with the index mark.
3. Insert a 0.05mm (0.002in.) feeler gauge into between the tappet adjusting screw and valve stem end to check the tappet clearance. If necessary, adjust the clearance by loosening the lock nut and turning the adjusting screw.
4. After adjusting, tighten the adjusting screw to the specified torque and lock the screw with the lock nut.
5. Make sure that the adjustment of the tappet clearance has not been disturbed while tightening the lock nut. Then install the tappet hole caps and generator cover.

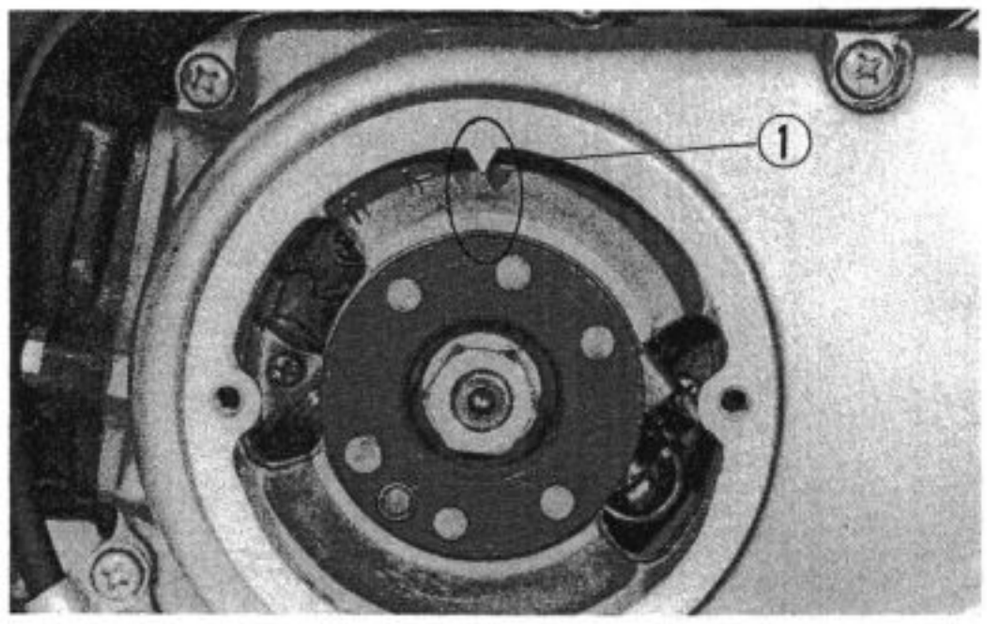

Fig. 2-1
1. "T" mark and index mark

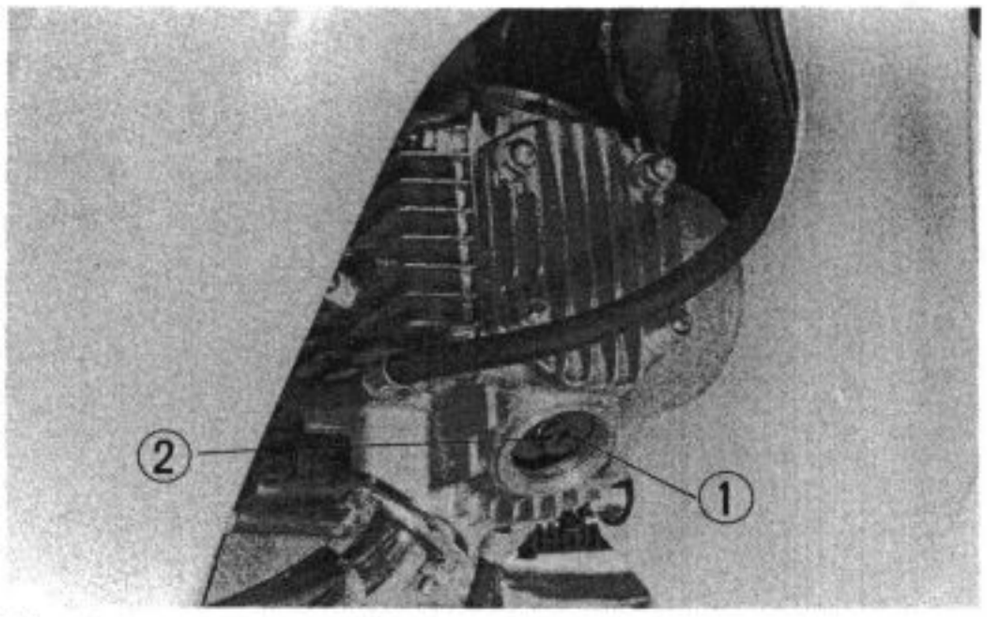

Fig. 2-2
1. Tappet adjusting screw 2. Lock nut

2. Contact Breaker Point Gap and Ignition Timing

Adjustment of ignition timing:

1. Remove the left crankcase cover.
2. Turn the flywheel counterclockwise. If the contact breaker points start opening when the "F" mark on the flywheel just passes the matching mark on the cover, the ignition timing is correct.

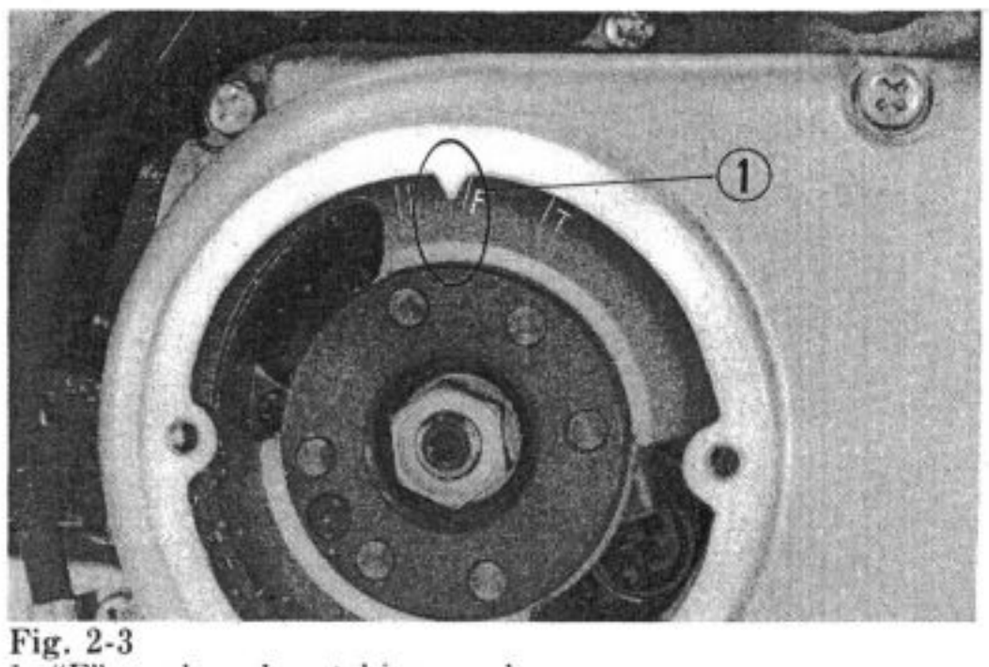

Fig. 2-3
1. "F" mark and matching mark

Ignition timing with a timing light inspection :

1. To set the timing light, follow the instruction provided with the service tester.
2. With the engine running at idle speed, aim the timing light to the matching mark.
   The "F" mark should align with the mark in the flashing.
3. To set the ignition timing correctly, loosen the screw and move the contact breaker plate by means of a standard screw driver until the "F" mark aligns with the matching mark.
4. After adjustment make sure that "F" mark aligns with the mark correctly using the timing light and also check if the point gap is 0.3~0.4 mm (0.012~0.016 in).
   If the gap exceeds the specification replace the points.

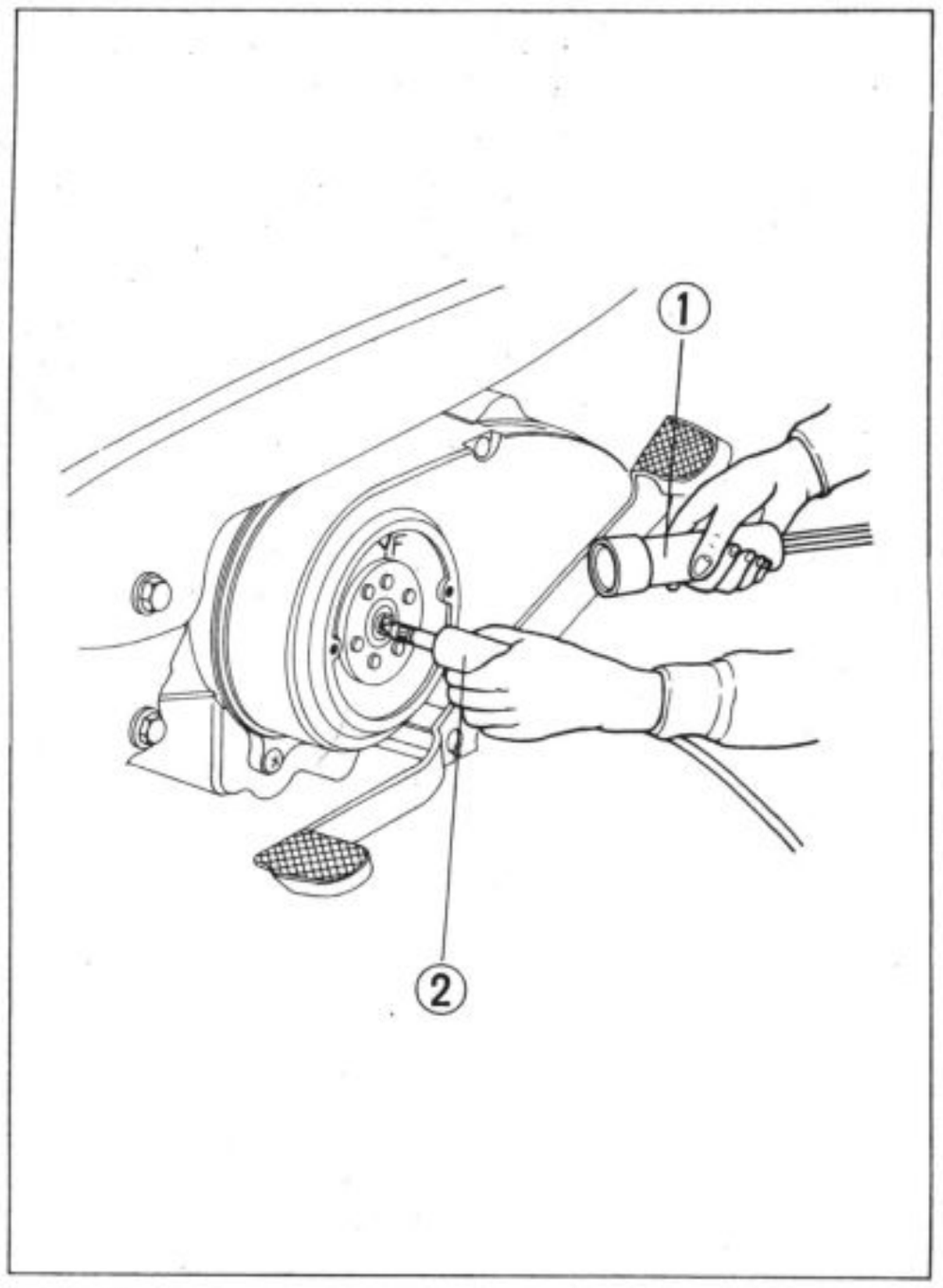

Fig. 2-4
1. Timing light 2. Tachometer

3. Carburetor

Idle speed adjustment :

1. Set the PS (pilot screw) to the position in the table below.

CF50	2 turns from the screwed-in position
CF70	1~¾ turn from the screwed-in position

2. Warm up the engine thoroughly (for two or three minutes in summer and five or six minutes in winter). Then turn the throttle stop screw so that the engine speed is 1300~1500 rpm.
3. If the engine operation is erratic in steps 1 and 2, again turn in or out the PS 1/8 turn from the position specified in the table above until the engine operation becomes smooth.
4. Upon noting the engine is running smoothly in step 3 above, again turn the throttle stop screw so that the engine idle speed is 1300~1500 rpm.

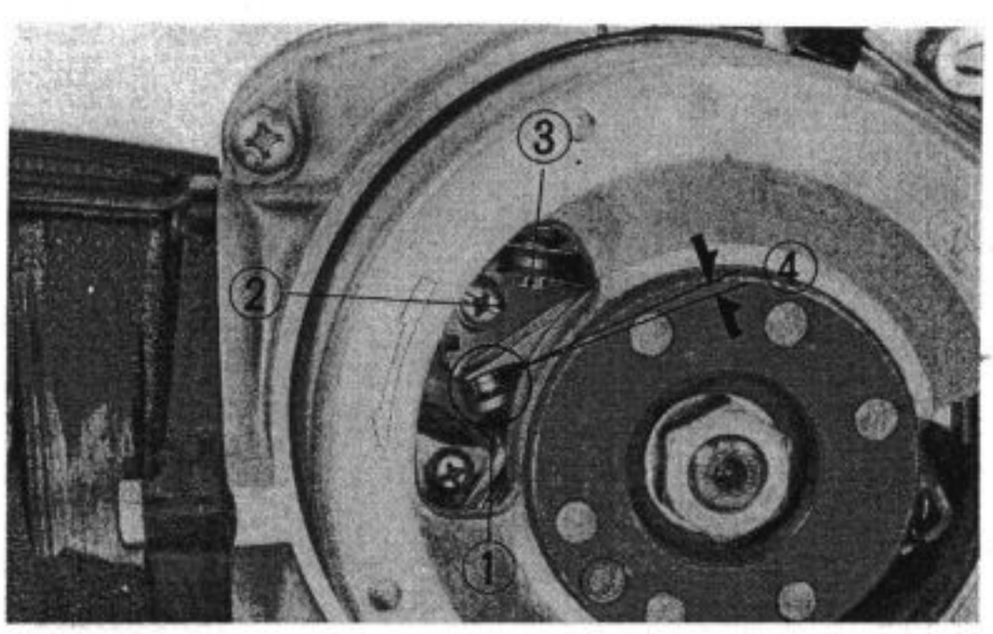

Fig. 2-5 1. Points 2. Adjusting screw
3. Contact breaker 4. Point gap

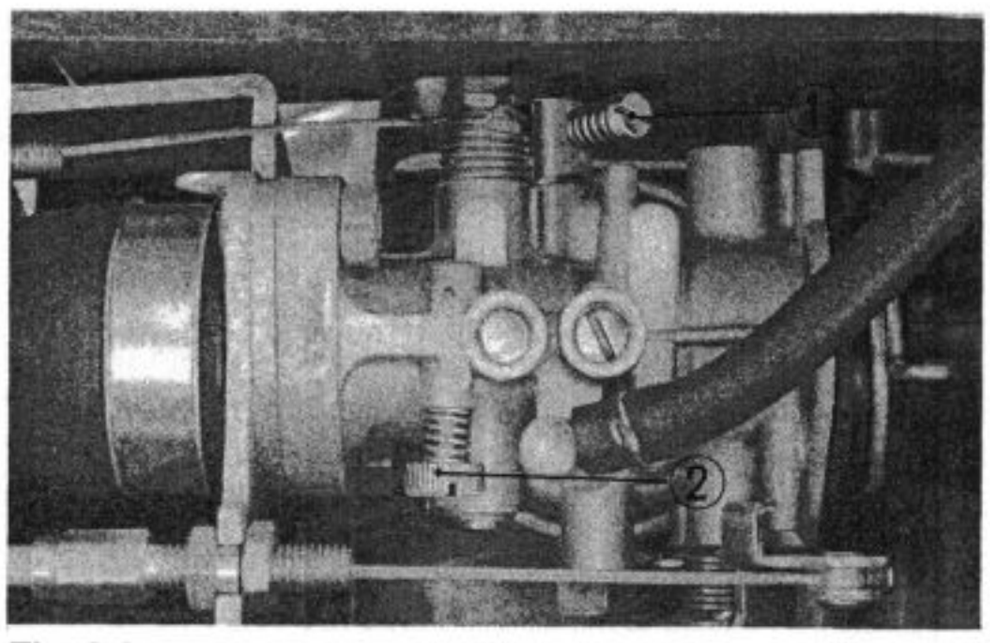

Fig. 2-6
1. Throttle stop screw 2. Air screw

4. Clutch

Adjustment of the clutch should be made with the engine stopped.

1. Loosen the adjusting nut.
2. Turn the adjusting screw counterclockwise one turn.
3. Slowly turn the adjusting screw clockwise until a resistance is felt.
4. Turn the adjusting screw counterclockwise 1/8 ~1/4 turn, and tighten the adjusting nut.

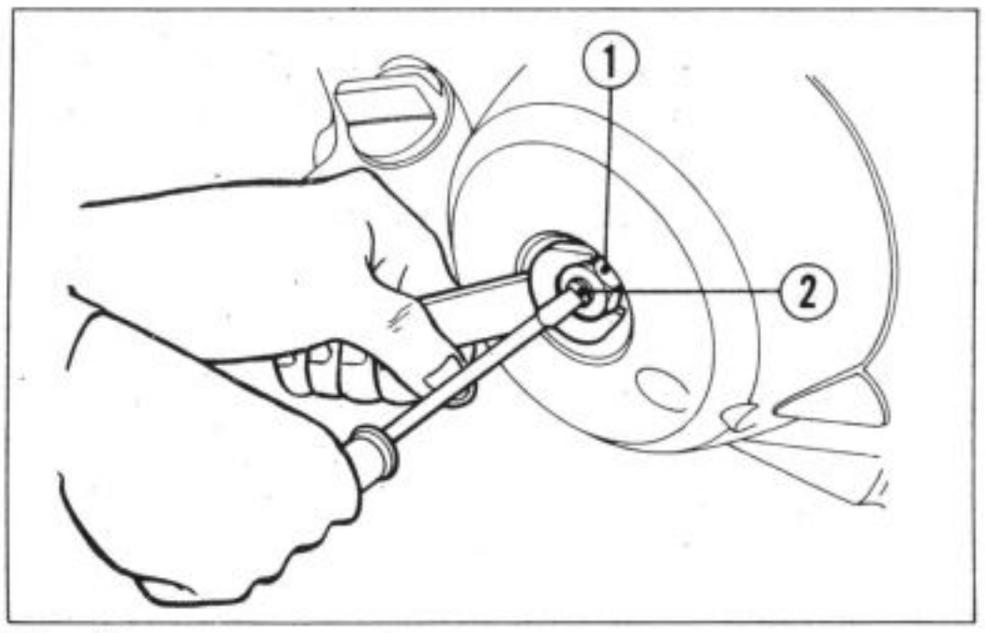

Fig. 2-7
1. Adjusting nut 2. Adjusting screw

5. Cam Chain

1. Start the engine and let it idle.
2. Loosen the 8mm lock nut and loosen the tensioner adjusting bolt about 1/2 turn. Then the cam chain tension can be adjusted properly.
3. If the chain is still noisy, proceed as follows: With the adjusting bolt loosened about 1/2 turn, remove the 14mm sealing bolt from under the left crankcase. Then tighten the tensioner adjusting bolt B slowly and stop it when the chain is no longer noisy.
4. After adjusting, tighten the tensioner adjusting bolt, 8mm lock nut and 14mm sealing bolt.
   NOTE:
   When tightening the 8mm lock nut, do not exceed the torque specification.

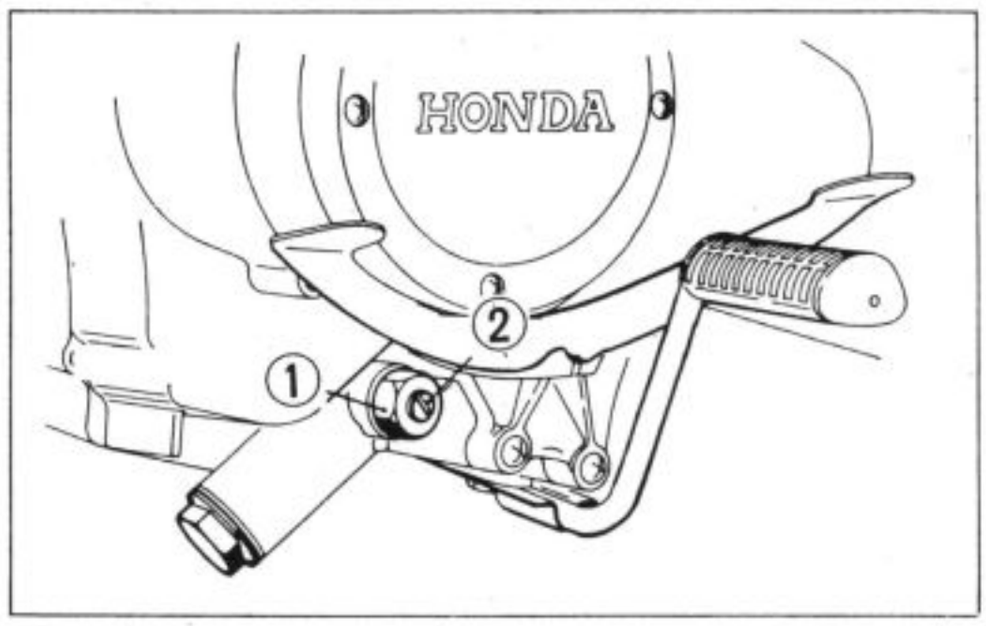

Fig. 2-8
1. 8mm lock nut 2. Tensioner adjusting bolt

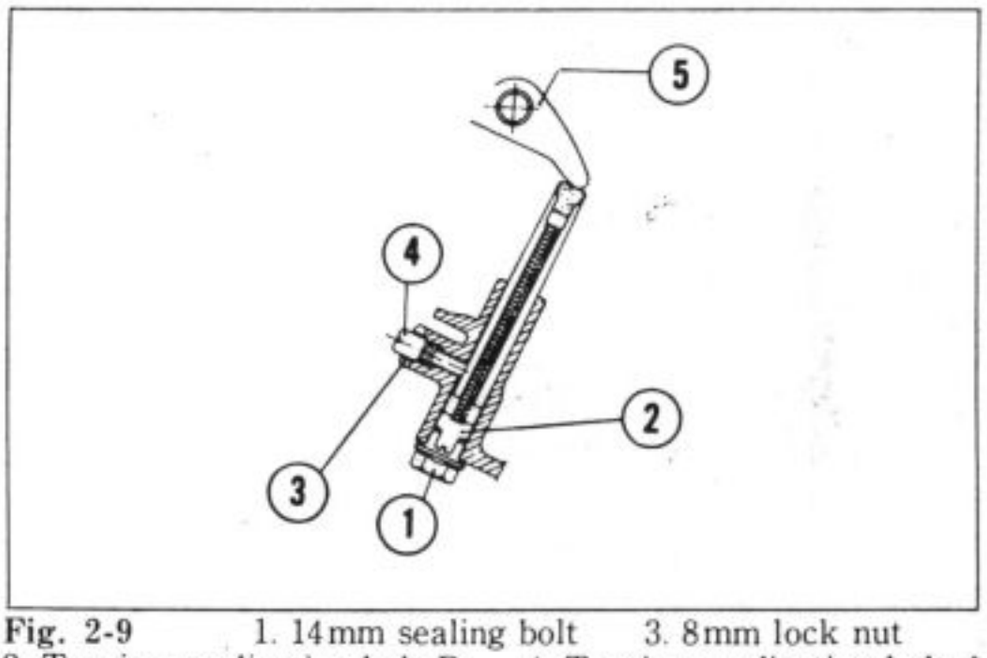

Fig. 2-9 1. 14mm sealing bolt 3. 8mm lock nut
2. Tensioner adjusting bolt B 4. Tensioner adjusting bolt A
5. Cam chain tensioner arm

6. Engine Oil

Oil level check:

1. Place a stand under the engine and place the vehicle in the straight ahead position.

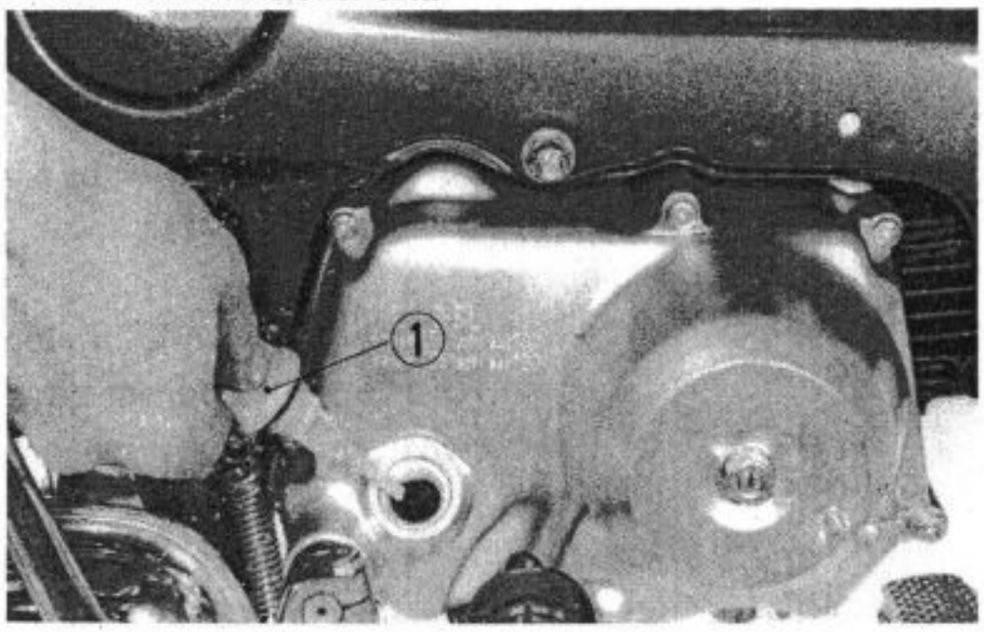

Fig. 2-10
1. Oil level gauge

2. Insert the oil level gauge into the oil filler hole to check the oil level. (Do NOT screw it in.) Oil should be up to the upper mark on the gauge.
3. If necessary, refill the crankcase with the specified oil.
   Specified oil: SAE 10W-40 (All seasons)

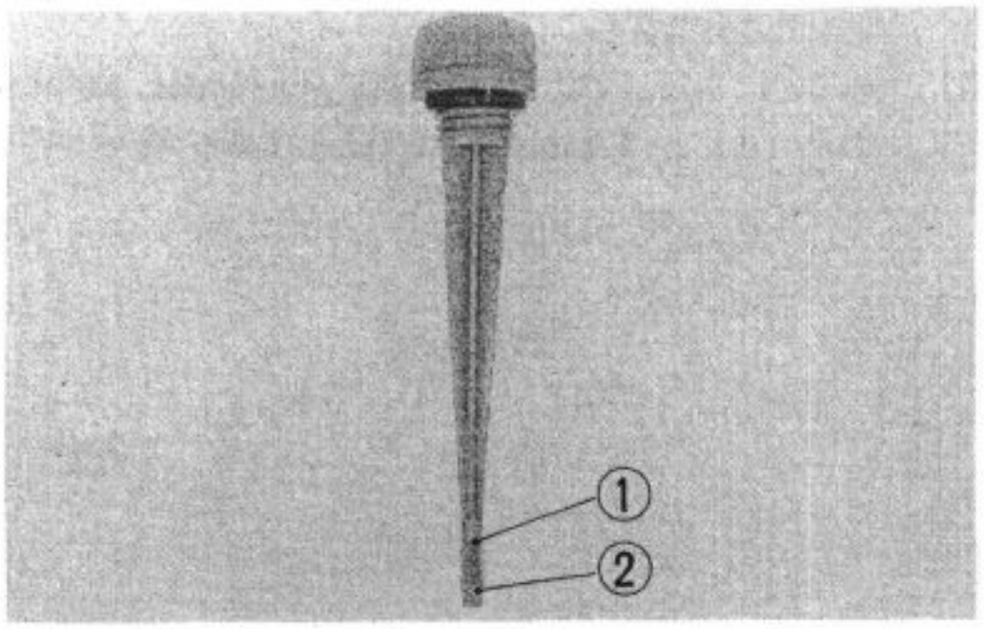

Fig. 2-11
1. Upper mark 2. Lower mark

Oil change

1. Remove the oil filler cap.
2. Place a pan under the drain hole in the crankcase. Remove the drain plug.
3. After oil stops draining from the crankcase, depress the kick starter pedal several times to drain the oil remaining in the engine.
4. Install the drain plug, making sure that its sealing washer is in good condition.
5. Refill the crankcase with the specified oil through the oil filler hole. The capacity is approximately 0.7 *l* (0.9 USqt). Check to see if the oil level is correct.

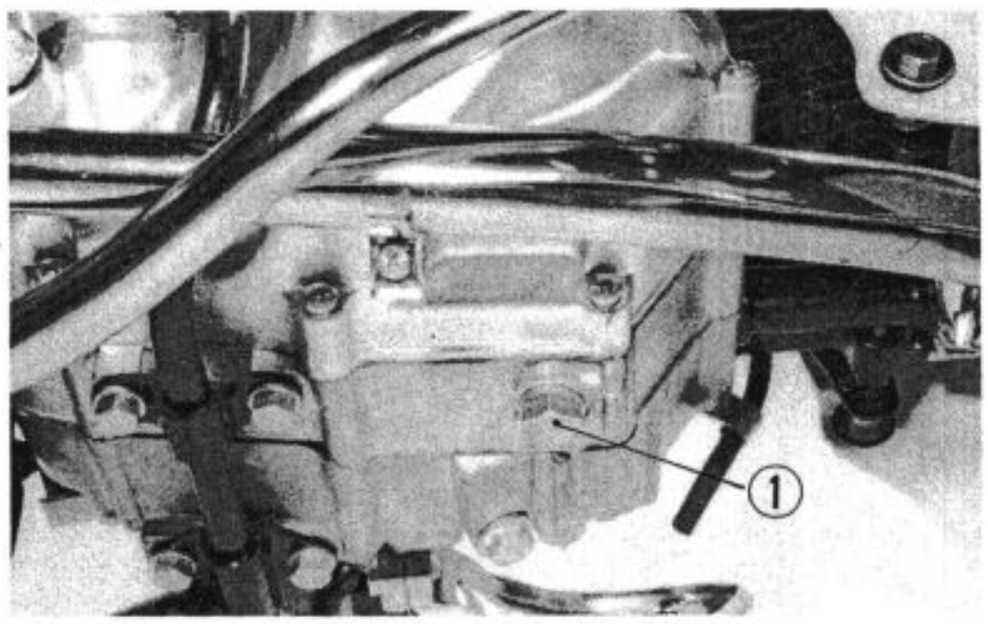

Fig. 2-12
1. Drain plug

7. Front Brake

1. Check to see if the front brake lever free play is 20 ~ 30 mm (0.8 ~ 1.2 in.) at the tip of the lever.

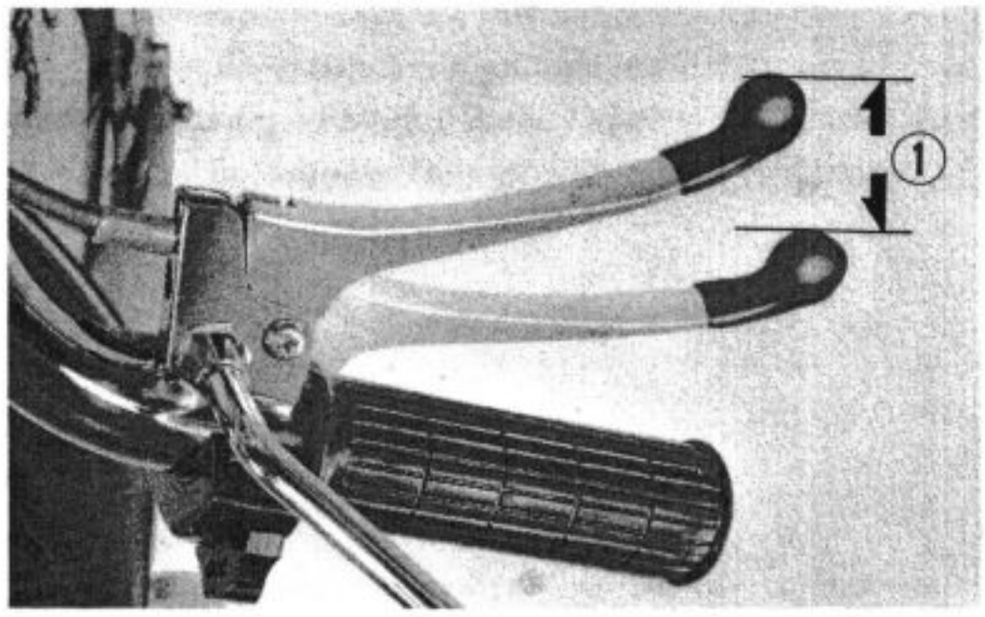

Fig. 2-13
1. Front brake lever free play

2. To adjust, turn the front brake adjusting nut in either direction. Turning the adjusting nut in the direction Ⓐ will decrease the free play and turning it in the direction Ⓑ will increase the play.

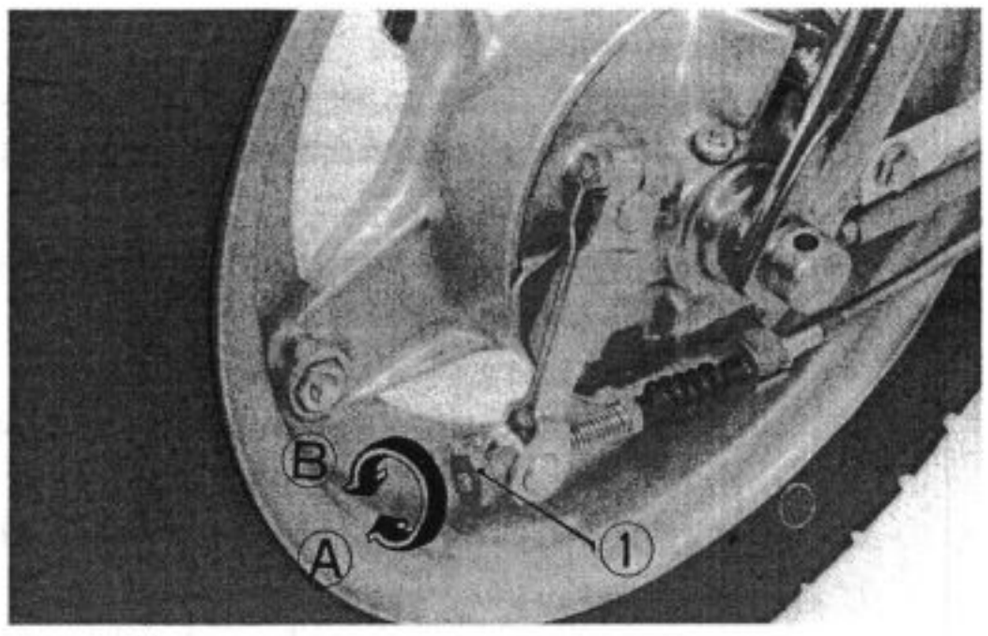

Fig. 2-14
1. Front brake adjusting nut

8. Rear Brake

1. Check to see if the rear brake pedal free play is 20 ~ 30 mm (0.8 ~ 1.2 in.) at the tip of the pedal.

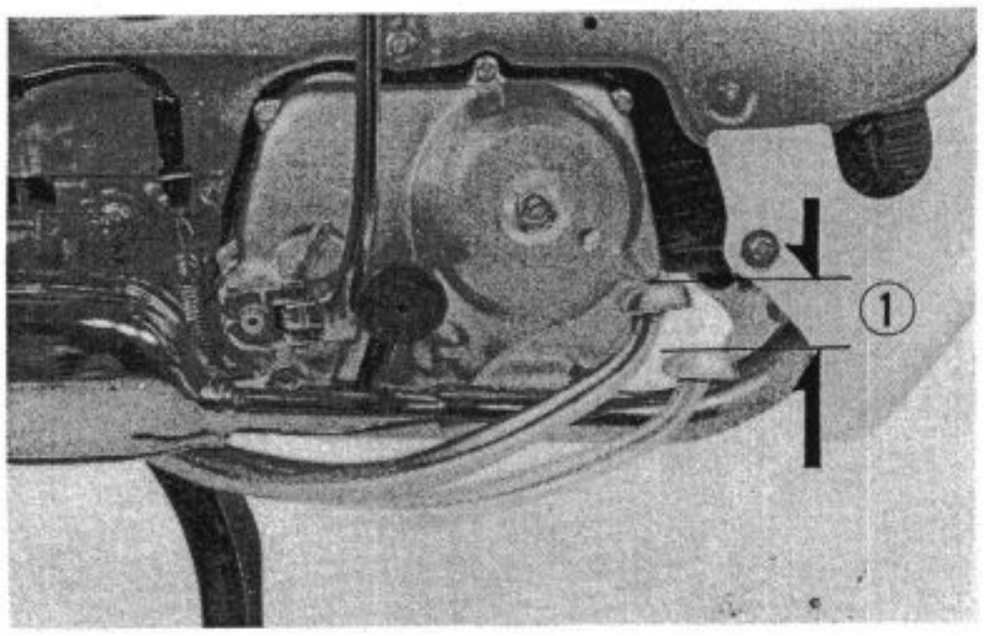

Fig. 2-15
1. Rear brake pedal free play

2. To adjust, turn the rear brake adjusting nut in either direction. Turning the adjusting nut in the direction Ⓐ will decrease the free play and turning it in the direction Ⓑ will increase the play.

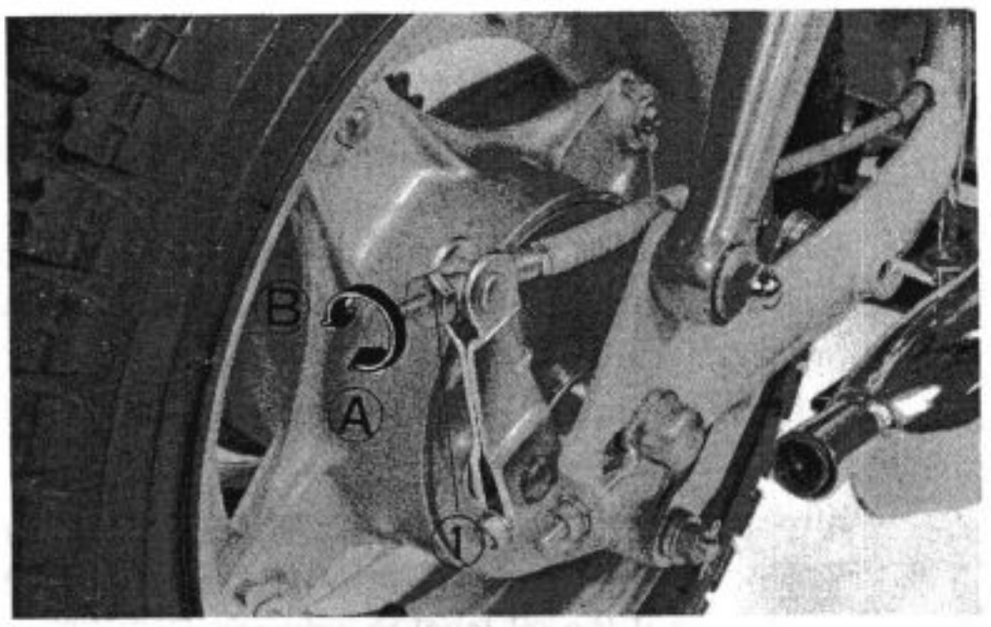

Fig. 2-16
1. Rear brake adjusting nut

9. Air Cleaner

1. Remove the air cleaner cover.
2. Remove the air cleaner element.
3. Clean the element using a blast of compressed air. Then install it in the direction of arrow.

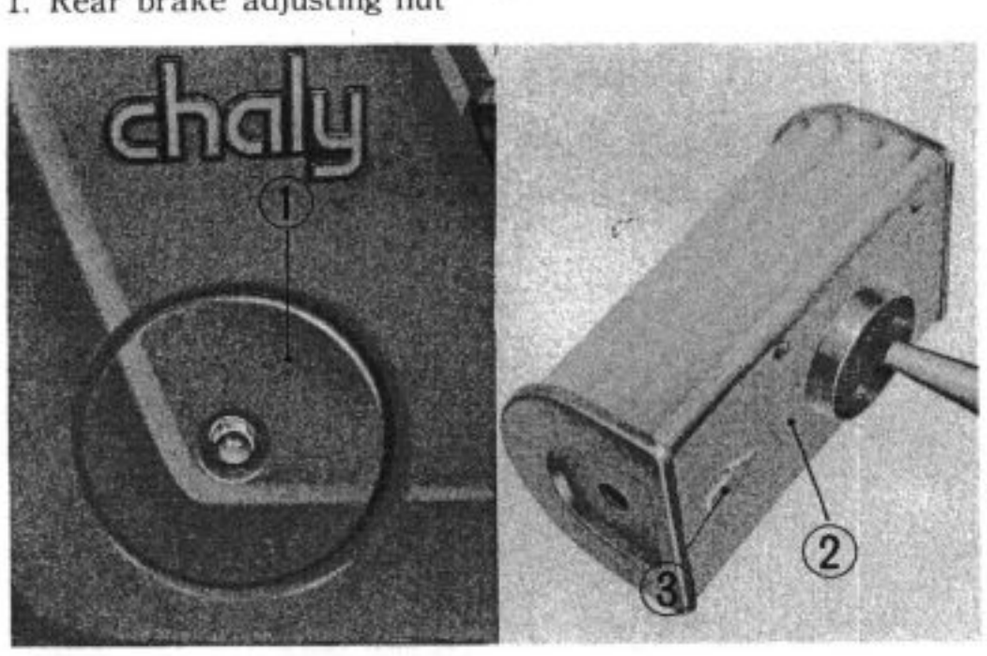

Fig. 2-17 1. Air cleaner cover
2. Air cleaner clement 3. Arrow mark

10. Drive Chain

Chain tension check:

1. Place a stand under the engine and raise the rear wheel off the ground. Place the transmission gears in the neutral position.
2. Finger-depress the chain at a point half-way between the sprockets and measure the slack.
   Chain slack specification: 20 mm (0.8 in.)
3. To adjust, remove the cotter pin and loosen the axle nut. Turn the right and left adjusting nuts in either direction. Align the index marks on the right and left adjusters with the reference marks on the side scales.
4. Upon adjustment, tighten the axle nut and install a new cotter pin. Completely bend the ends of cotter pin.

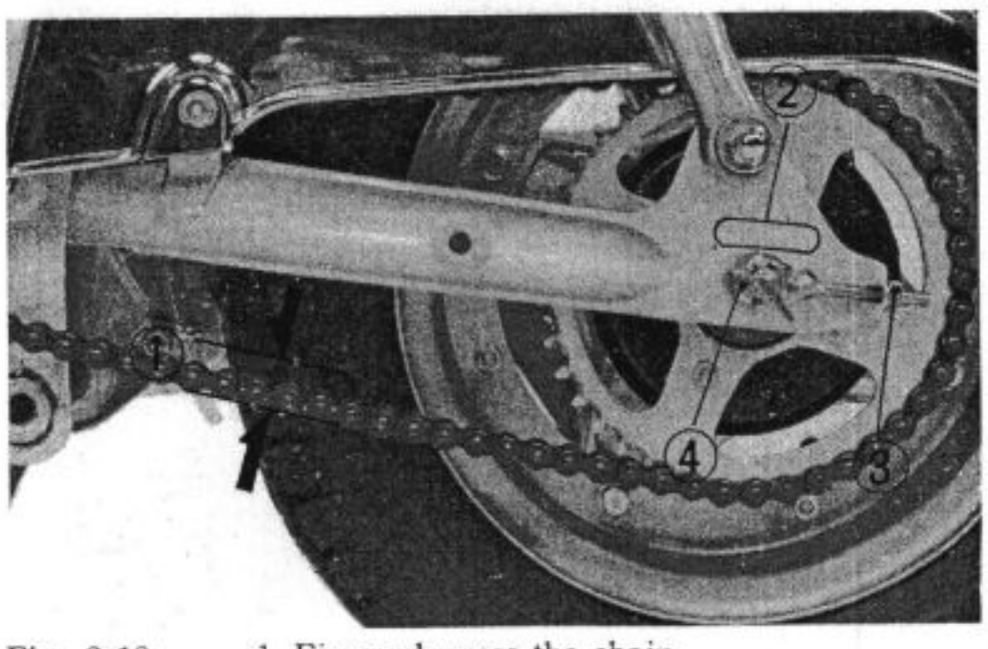

Fig. 2-18 1. Finger-depress the chain
2. Index marks and reference marks
3. Adjusting nut 4. Axle nut

III. ENGINE

1. On-Frame Service

No.	Item	Ref. page
1	Cylinder head removal and installation	9
2	Cylinder removal and installation	10
3	Piston replacement	10
4	Clutch removal and installation	14
5	Oil pump removal and installation	15
6	A.C generator removal and installation	18
7	Carburator removal and installation	22

2. Engine Removal and Installation

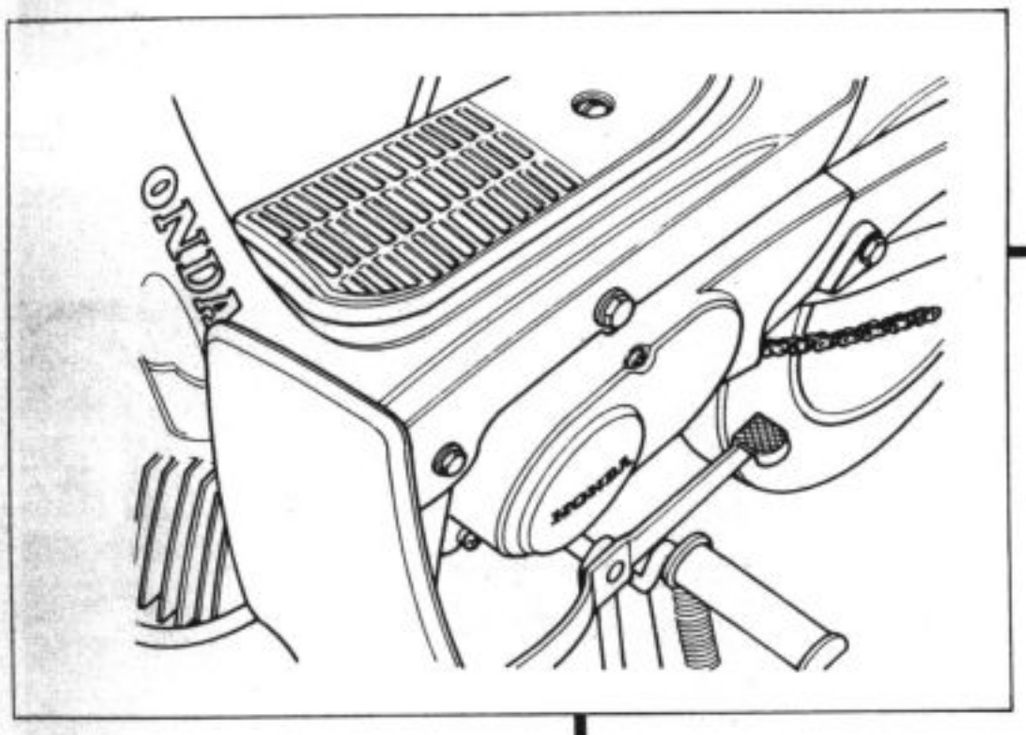

1. Remove the muffler.

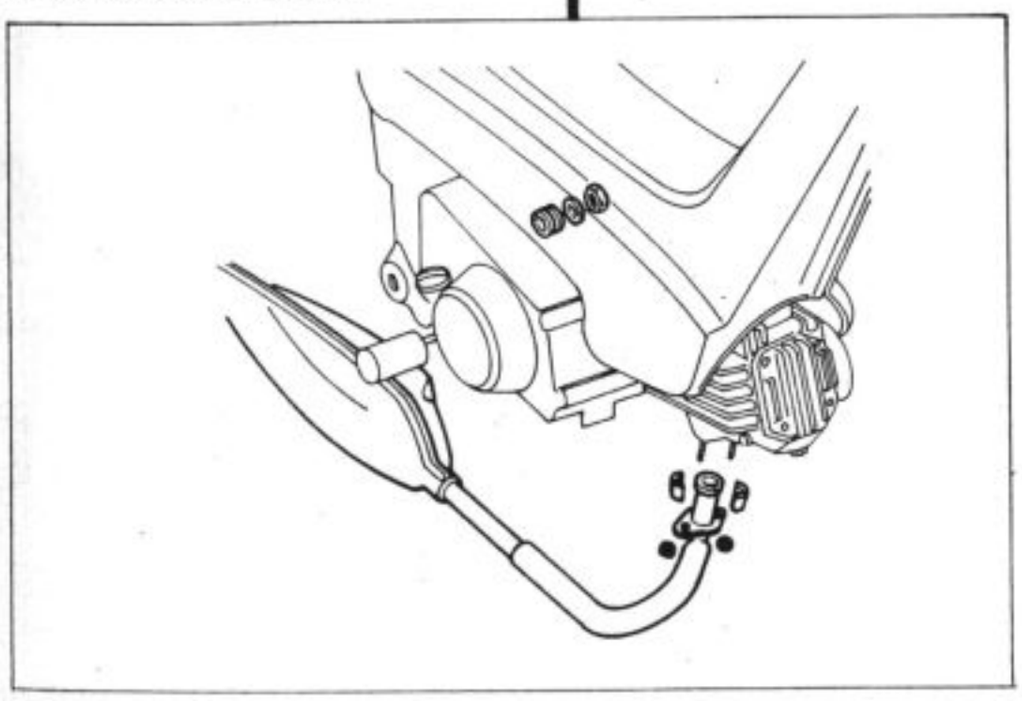

Fig. 3-1

2. Remove the step bars, gear change pedal, left crankcase cover and drive chain.

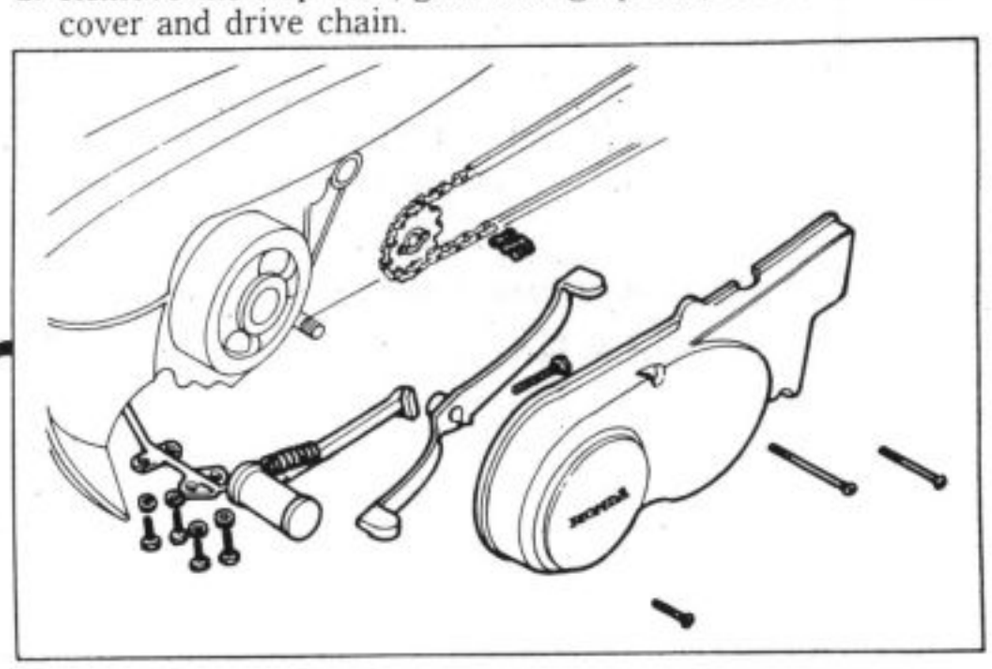

3. Remove the front cover.

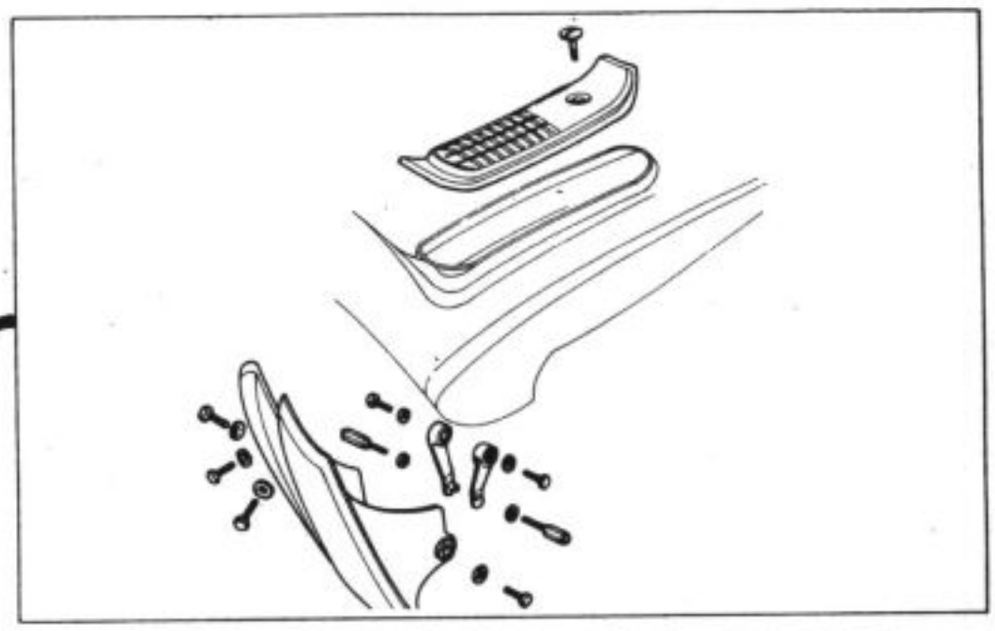

4. Remove the 8mm bolts.

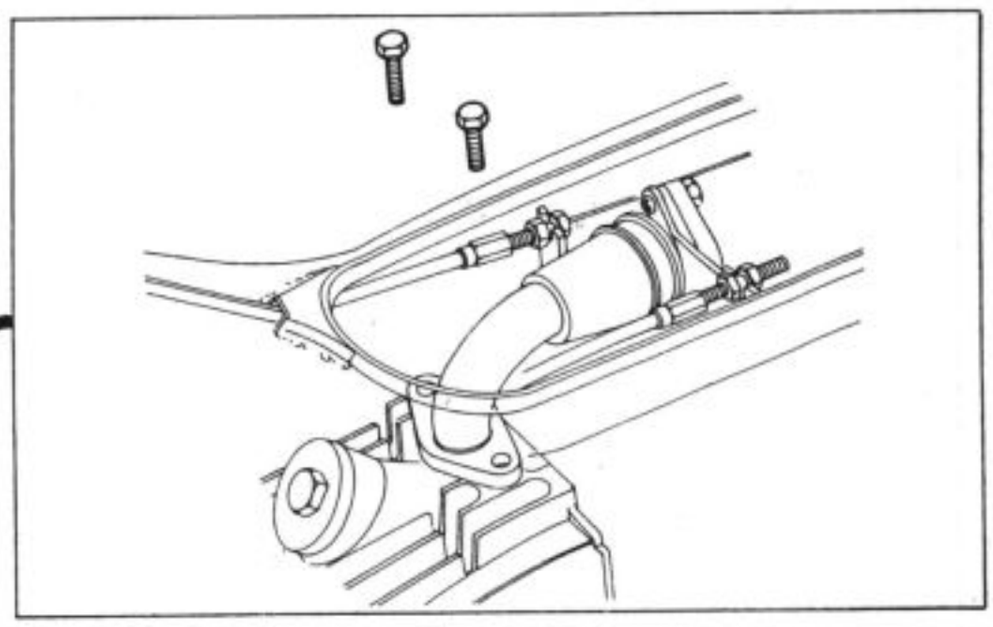

5. Remove the engine hanger bolts.

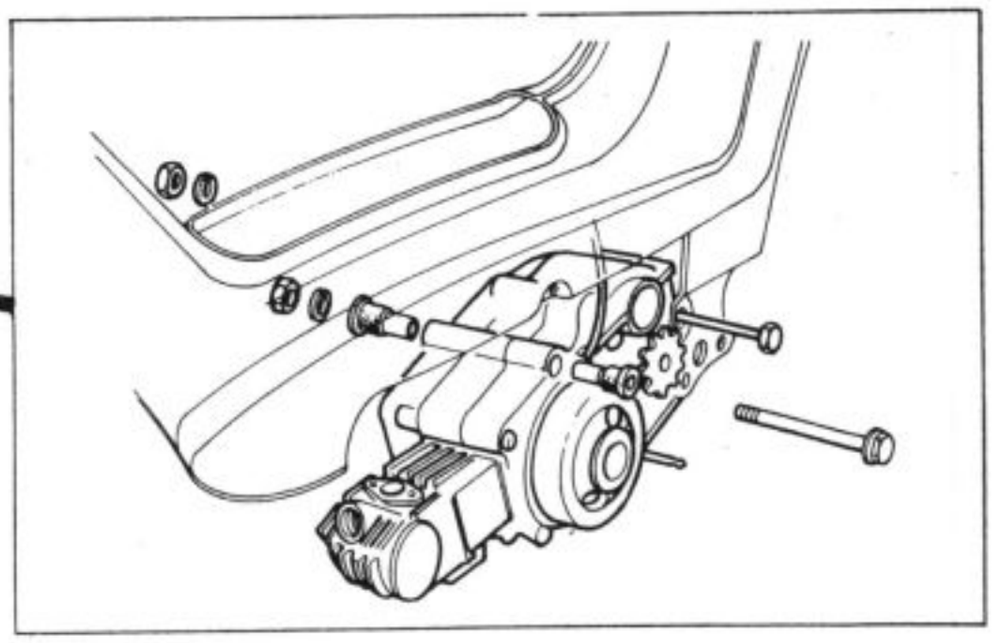

Removal:

1. Remove the engine in the numerical order in Fig. 3-1.
2. Remove the step bars and then remove the gear change pedal.
3. Remove the brake pedal spring and remove the lower engine hanger bolt.

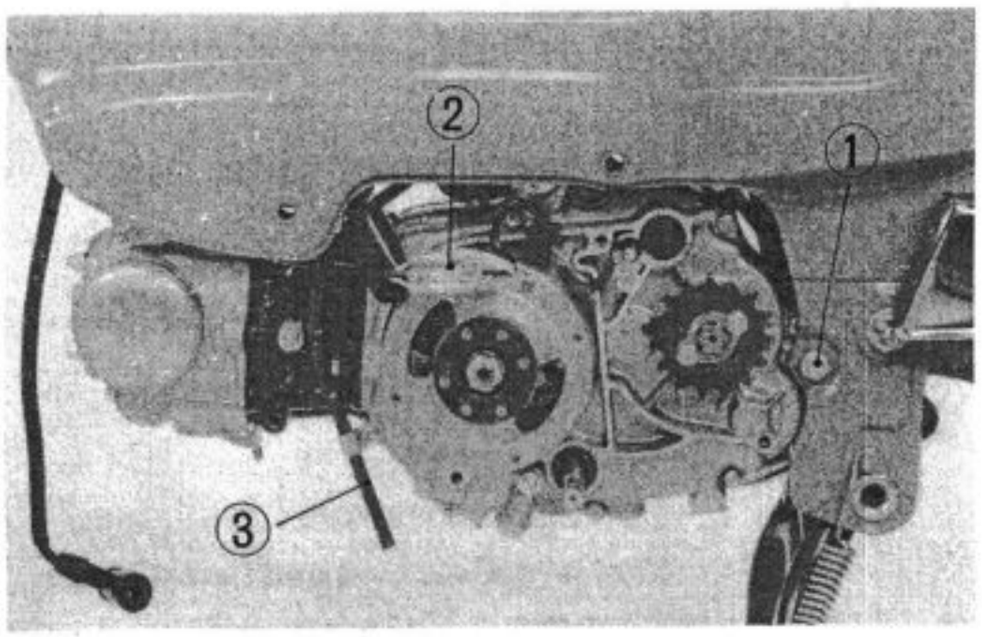

Fig. 3-2 1. Lower engine hanger bolt
2. Flywheel cord 3. Carburetor overflow tube

Installation:

1. Install the lower engine hanger bolt.
2. Connect the flywheel cord.
   NOTE:
   Secure the cord with a clip.
3. Route the carburetor overflow tube through the clip.
4. Install the upper engine hanger bolt.
   NOTE:
   Check to see if the engine support cushion is attached to the engine.
5. Install the drive chain.
   NOTE:
   Install the chain clip correctly as shown.
6. Adjust the drive chain tension. (See page 6.)
7. Install the carburetor.
   NOTE:
   Make sure that the gasket is in correct position.

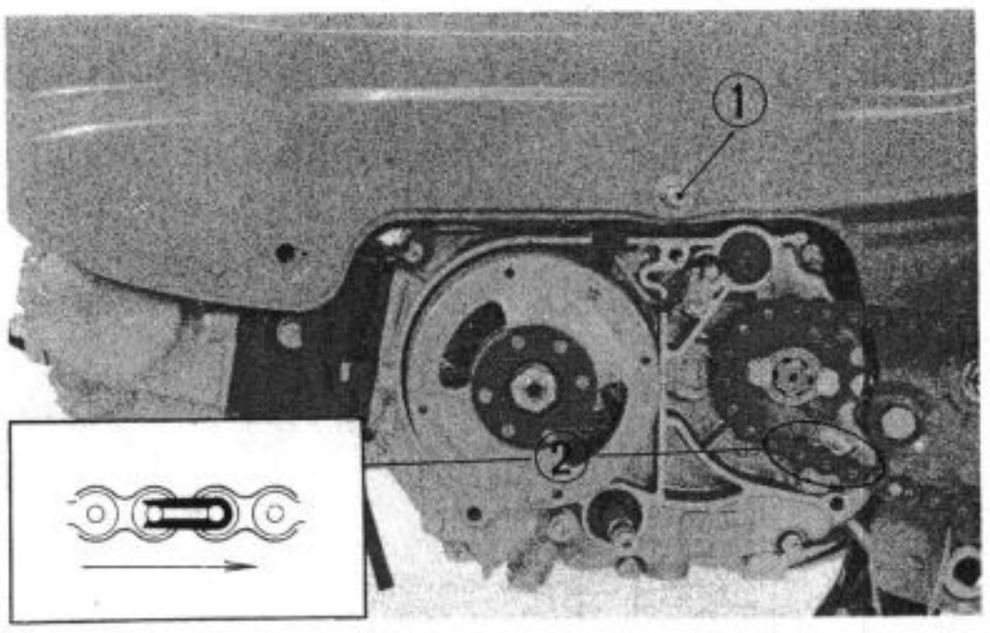

Fig. 3-3
1. Upper engine hanger bolt 2. Installing the drive chain clip

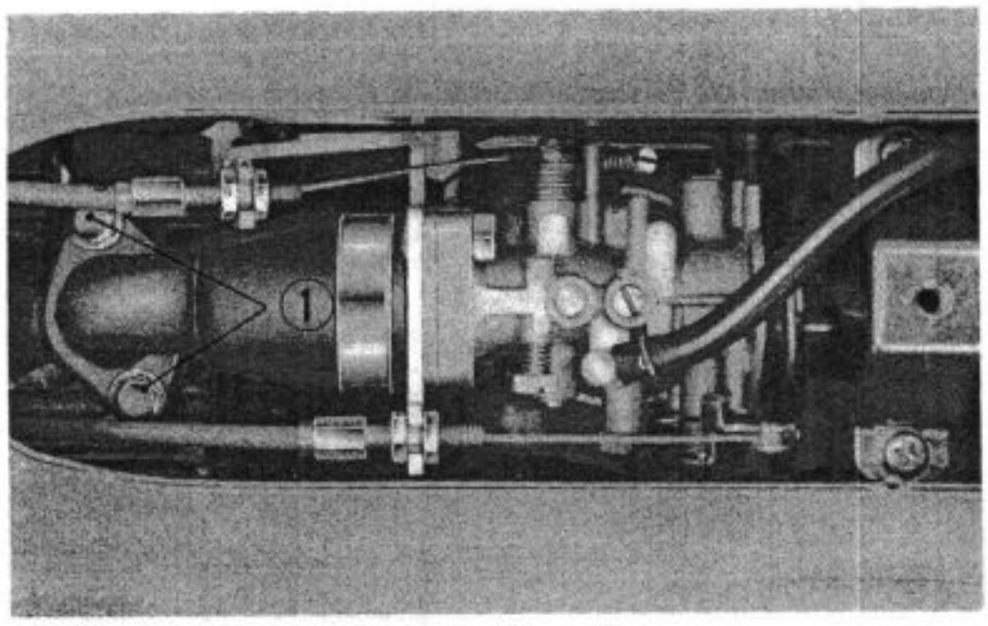

Fig. 3-4
1. 6mm bolts

8. Install the right and left engine support bands in correct position with the "R" or "L" mark facing the outside.
9. First install the gear change pedal. The install the step bars.

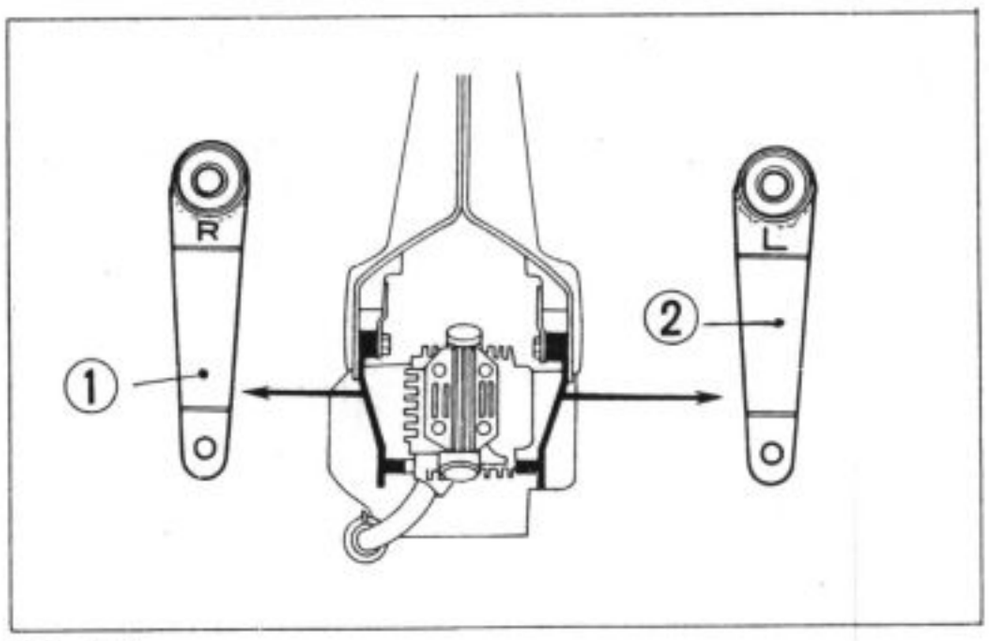

Fig. 3-5
1. Right engine support band 2. Left engine support band

3. Cylinder Head, Cylinder and Piston

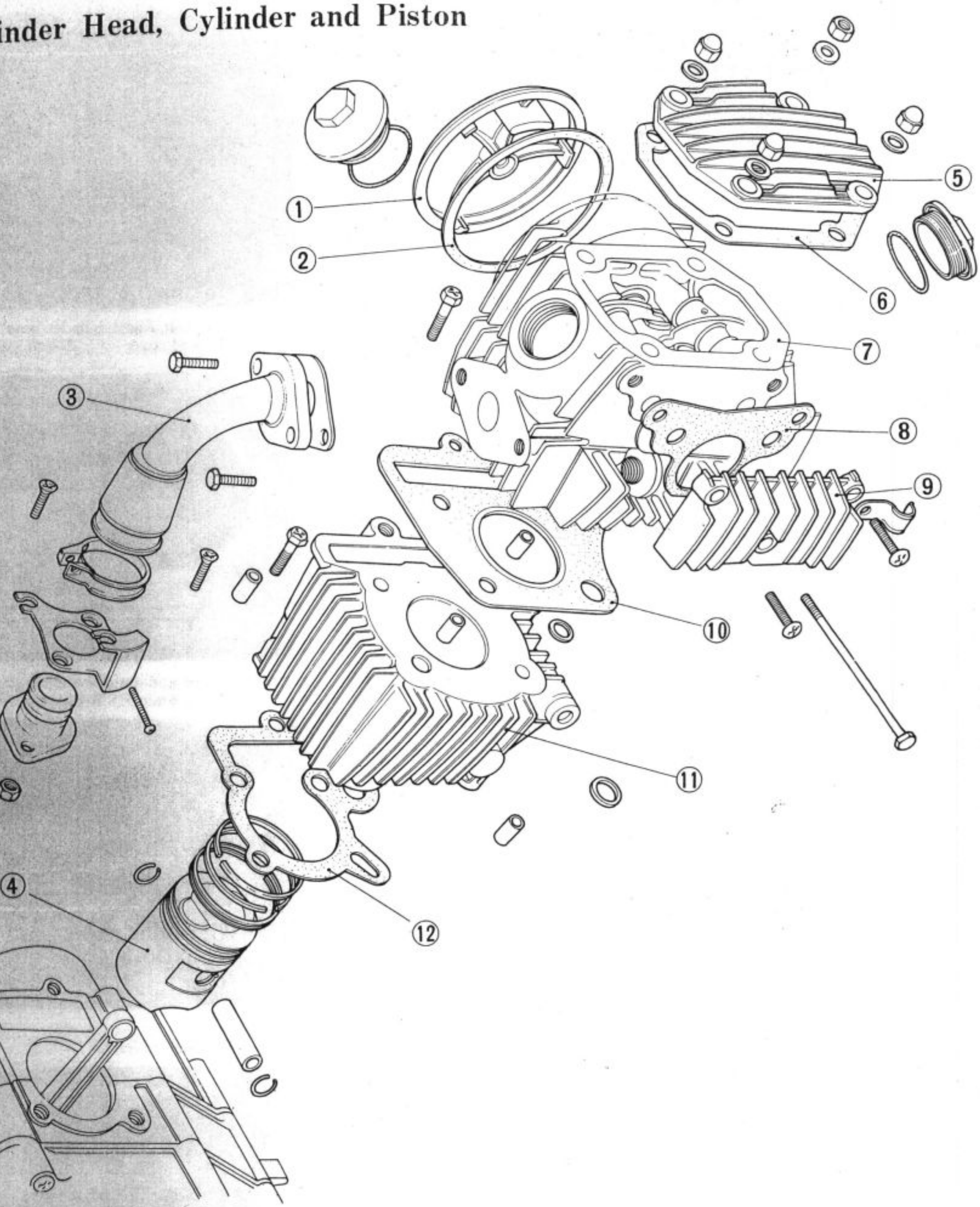

Fig. 3-6

① Left cylinder head side cover
② Left cylinder head side cover gasket
③ Inlet pipe
④ Piston
⑤ Cylinder head cover
⑥ Cylinder head cover gasket
⑦ Cylinder head
⑧ Right cylinder head side cover gasket
⑨ Right cylinder head side cover
⑩ Cylinder head gasket
⑪ Cylinder
⑫ Cylinder gasket

Disassembly:

1. Remove the cylinder head cover.
2. Remove the right and left cylinder head side covers.

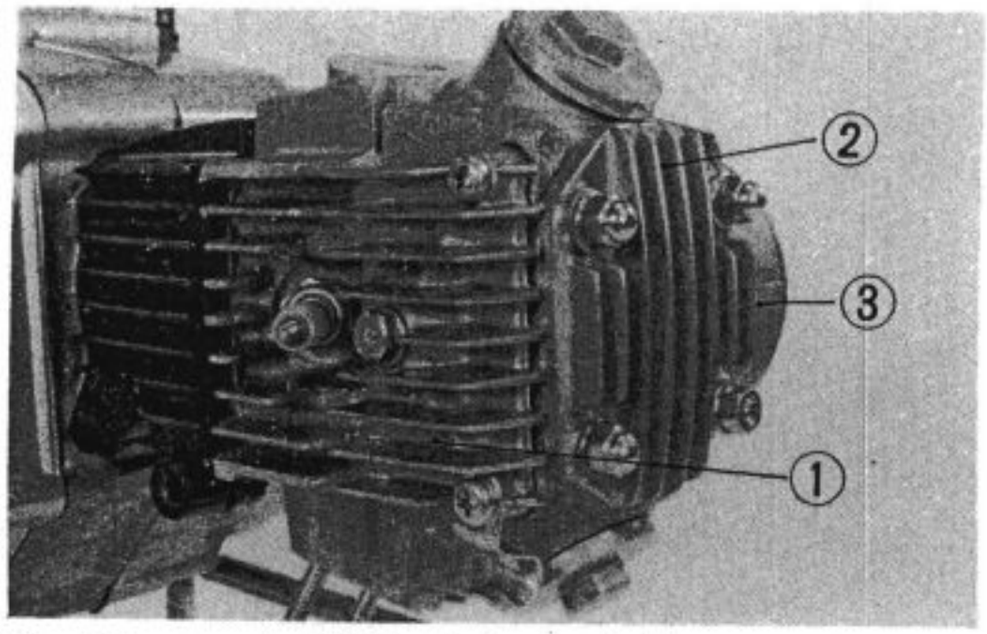

Fig. 3-7 1. Right cylinder head side cover 2. Cylinder head cover 3. Left cylinder head side cover

3. Separate the cam sprocket from the camshaft.
   a. Turn the crankshaft to align the "O" mark on the cam sprocket with the notch in the cylinder head. Then remove the 5mm knock bolts and separate the cam sprocket from the camshaft.
   b. Push the camshaft to remove the cam sprocket.
4. Remove the cylinder head.
   a. Remove the 6mm HS bolt. If it is difficult to remove the cylinder head, lightly tap it with a mallet, taking care not to damage the fins.
5. Remove the cam chain guide roller pin and cam chain guide roller.
6. Remove the cylinder.
   a. Remove the 6mm HS bolt and remove the cylinder by tapping it lightly with a mallet.
   NOTES:
   1. Do not damage the fins.
   2. When removing the cylinder, do not damage the piston.

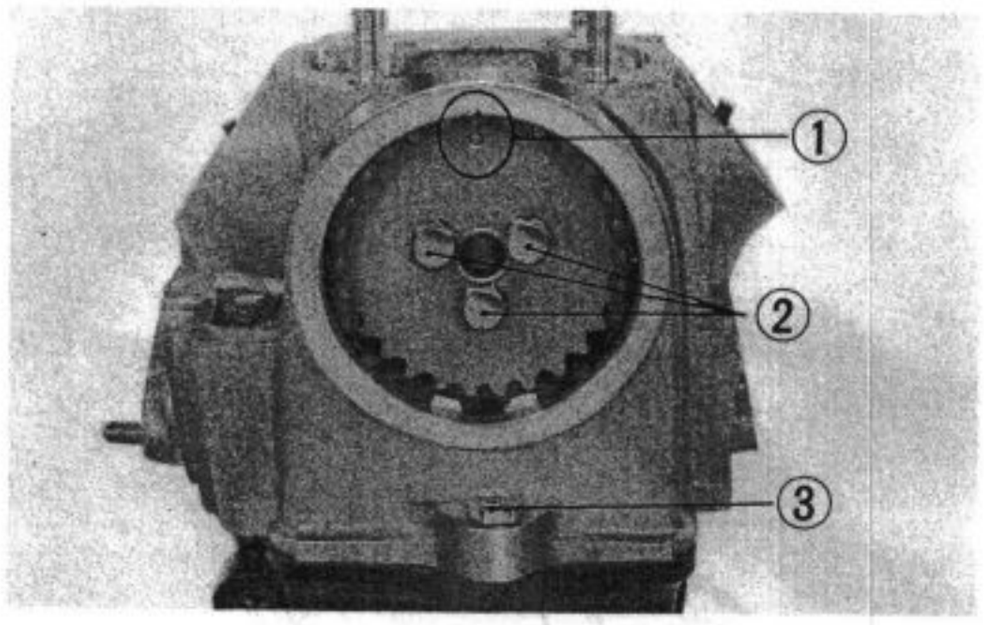

Fig. 3-8 1. "O" mark and notch in cylinder head 2. 5mm knock bolts 3. 6mm HS bolt

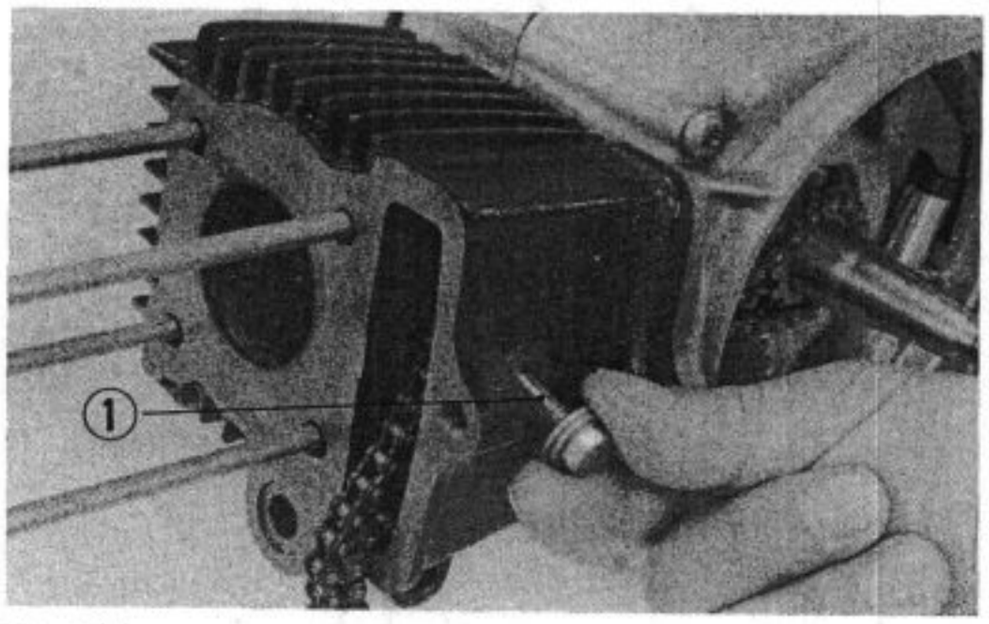

Fig. 3-9
1. Cam chain guide roller pin

7. Remove the piston.
   a. Place a waste cloth under the piston to prevent the piston pin clips from dropping into the crankcase.
8. Remove the piston rings.
   NOTE:
   Take care not to score or scratch the piston.

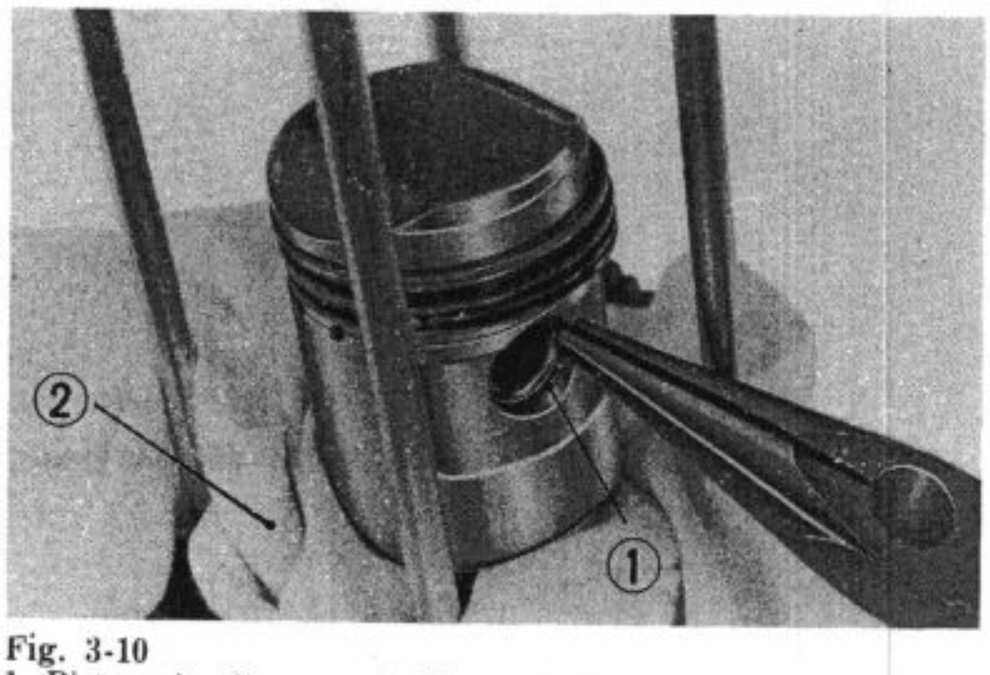

Fig. 3-10
1. Piston pin clip 2. Waste cloth

Camshaft and valves

1. Remove the tappet hole caps and loosen the tappet adjusting screws.
2. Remove the rocker arm shafts and rocker arms.
   a. Remove the rocker arm shaft by screwing the 8mm bolt in.
3. Remove the camshaft.

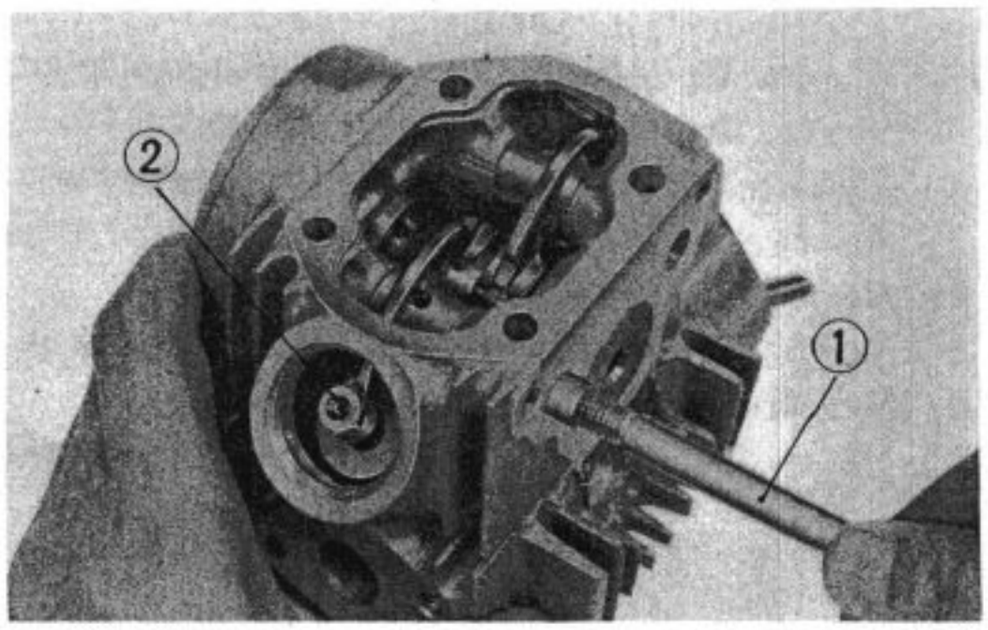

Fig. 3-11
1. 8mm bolt 2. Tappet adjusting screw

4. Using the valve spring compressor (Tool No. 07957-3290000), compress the valve springs and remove the valve cotters, valves and springs in this order.
5. To remove the valve guides for replacement, use the valve guide remover (Tool No. 07942-3290200).

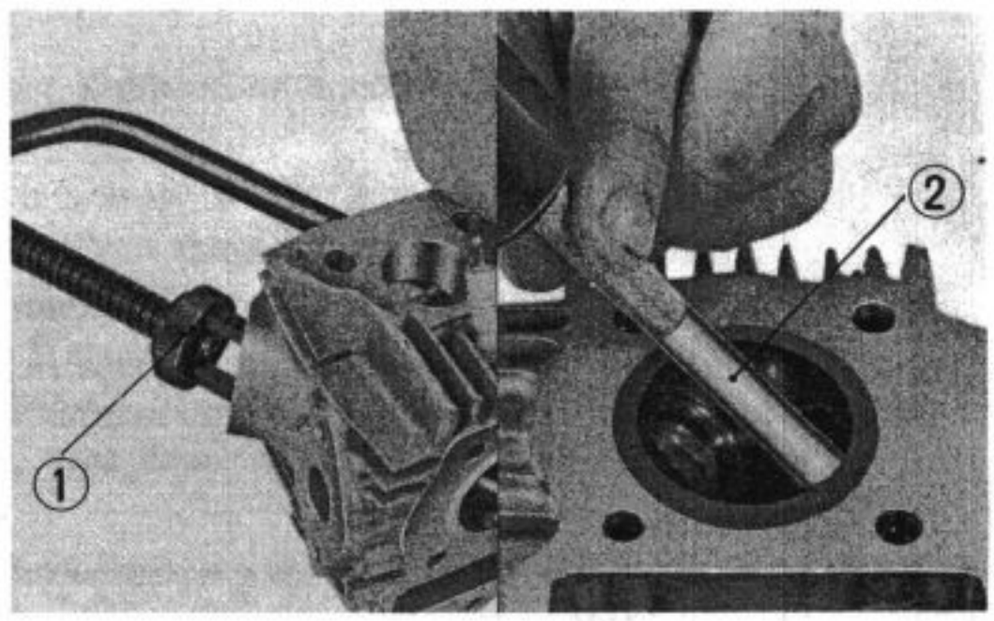

Fig. 3-12
1. Valve litter 2. Valve guide remover

Inspection:

1. Mesure the rocker arm-to-shaft clearance.
2. Measure the valve seat width. Apply a thin coat of red lead to the valve seat surface uniformly. Press the valve against the seat and rotate it to check to see if seat is in good condition. If not, reface the valve seat with a valve seat grinder.
   NOTE:
   Carefully reface the valve seat, if necessary, in accordance with the instructions provided with the grinder.

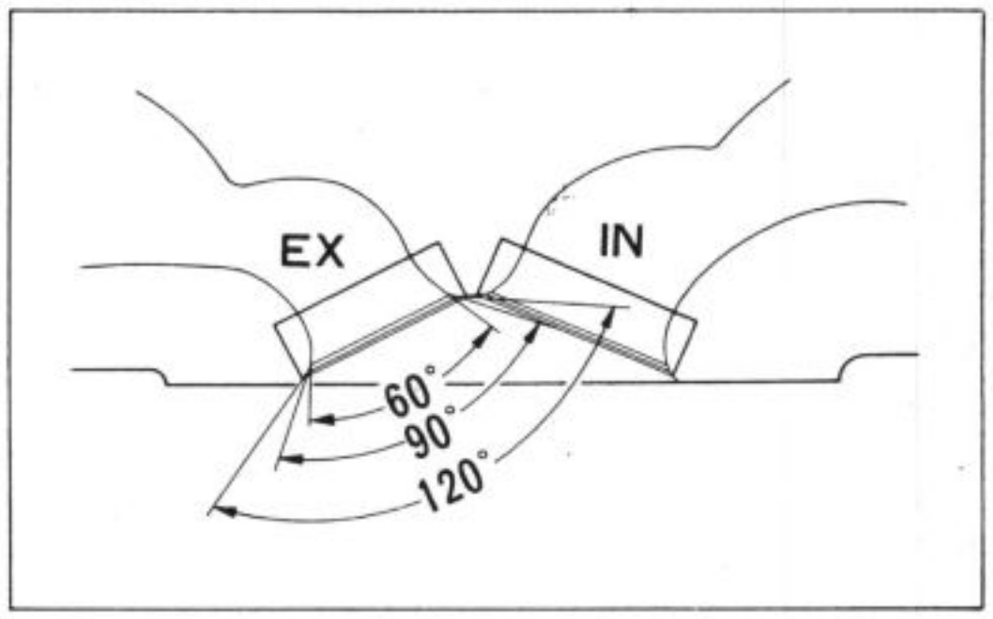

Fig. 3-13

〈 CF50 〉

- Inspection of valve seat contact. Apply a thin coat of prussian blue or similar paste to valve seat.

Press valve against seat and rotate it to check for proper contact. If improper, Iap valve and seat and recheck. If still improper, reface valve seat with a valve seat cutter. To reface, use a 60° cutter, a 120° cutter and a 90° cutter in this order. After, refacing, relap valve and seat until proper seat contact width 0.7—1.0mm (0.028—0.039in.) is obtained.
NOTE:
Do not cut valve seat excessively.

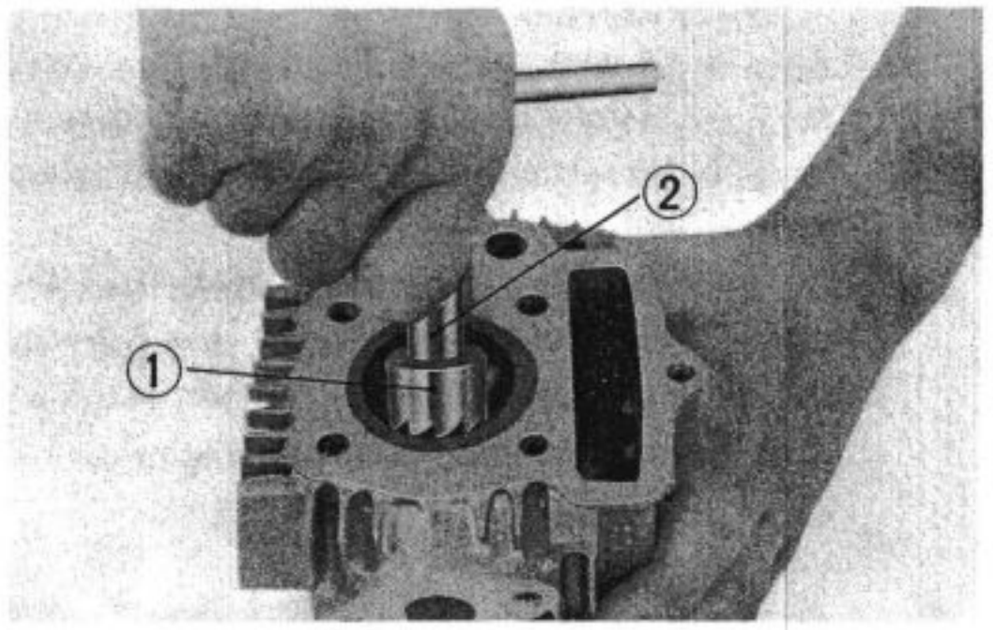

Fig. 3-14
1. Valve seat cutter
2. Valve seat cutter holder

3. Measure the valve stem OD.
4. Measure the valve stem-to-guide clearance.
5. Measure the camshaft journal OD.
6. Check the camshaft and rocker arm surfaces for wear.
7. Measure the cylinder bore.
8 Measure the piston skirt OD.
9. Measure the piston pin clearance in the piston.
10. Measure the piston ring gap.
11. Measure the piston ring side clearance.

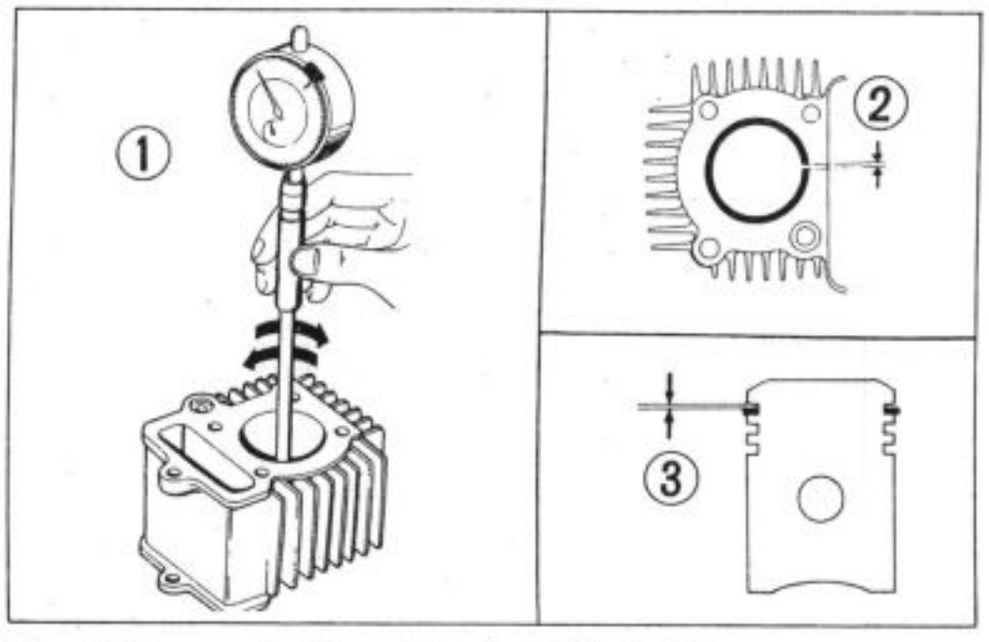

Fig. 3-15 1. Measuring the cylinder ID
2. Piston ring gap 3. Piston ring side clearance

Assembly :

1. Install the piston rings, taking care not to score or scratch the piston.
   a. Use piston rings of the same maker as a set. Face the markings on the rings upward.
   b. When installing new piston rings, put them in the grooves in the piston and check if they move smoothly.
   c. The ring gaps should be staggered 120° and NOT be at right angles to the piston pin.
2. Piston installation
   a. Face the "▼" mark on a piston toward the front (exhaust) side or the "IN" mark on a piston the rear (intake) side.
   b. Install the piston pin clips as shown in Fig. 3-16.

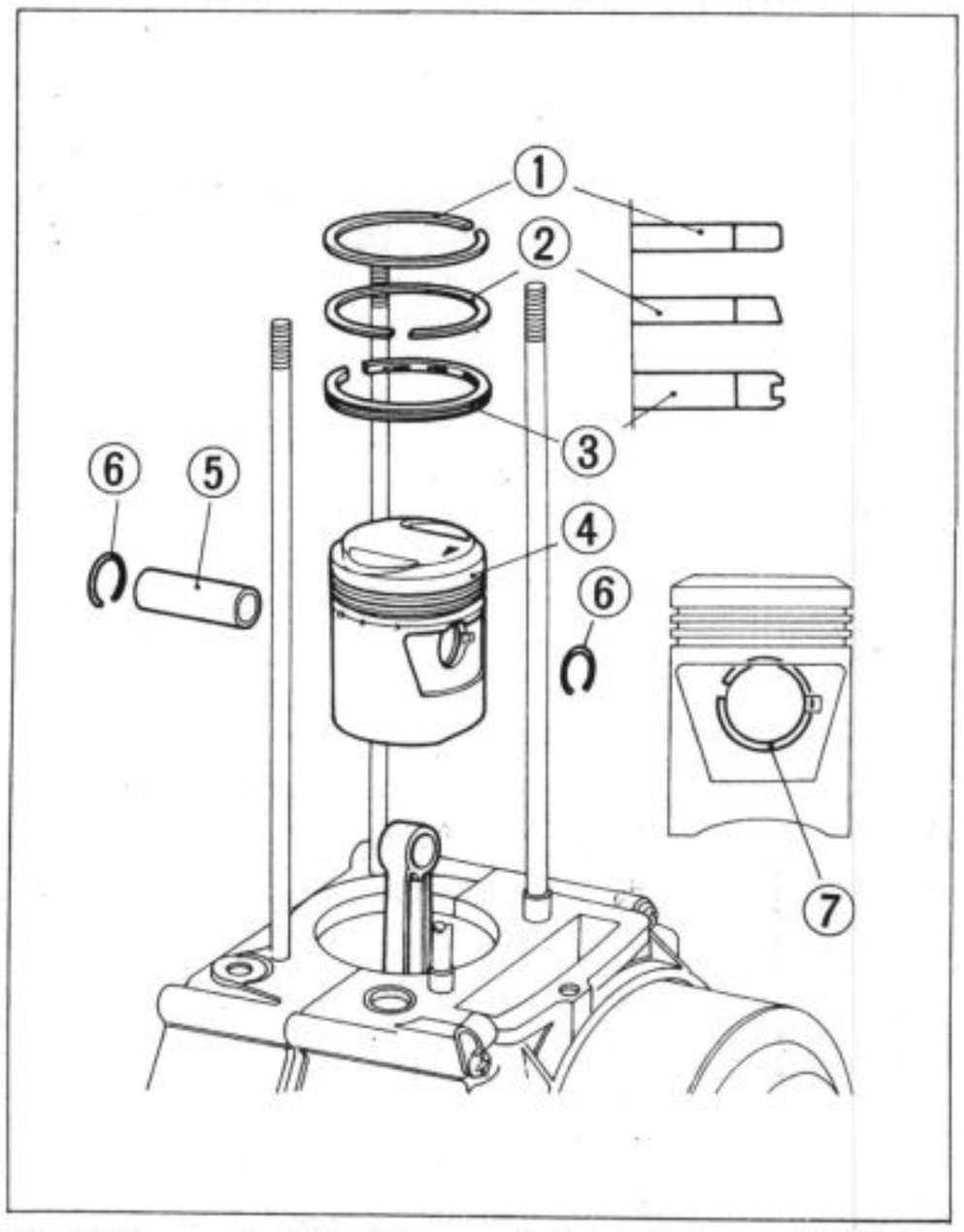

Fig. 3-16 1. Top ring 2. Second ring 3. Oil ring
4. Piston 5. Piston pin 6. Piston pin clips
7. Location of piston pin

3. Cylinder installation
   a. Check to see if the cylinder gasket, two dowel pins and 16mm rubber gasket are in correct position.
   b. Apply a coat of oil to the piston rings and to the bottom of the cylinder.
   c. Making sure of the location of the piston ring gaps, push down the cylinder while pressing the piston rings into the grooves in the piston.
   d. Route the cam chain through the cylinder and install the chain guide roller.

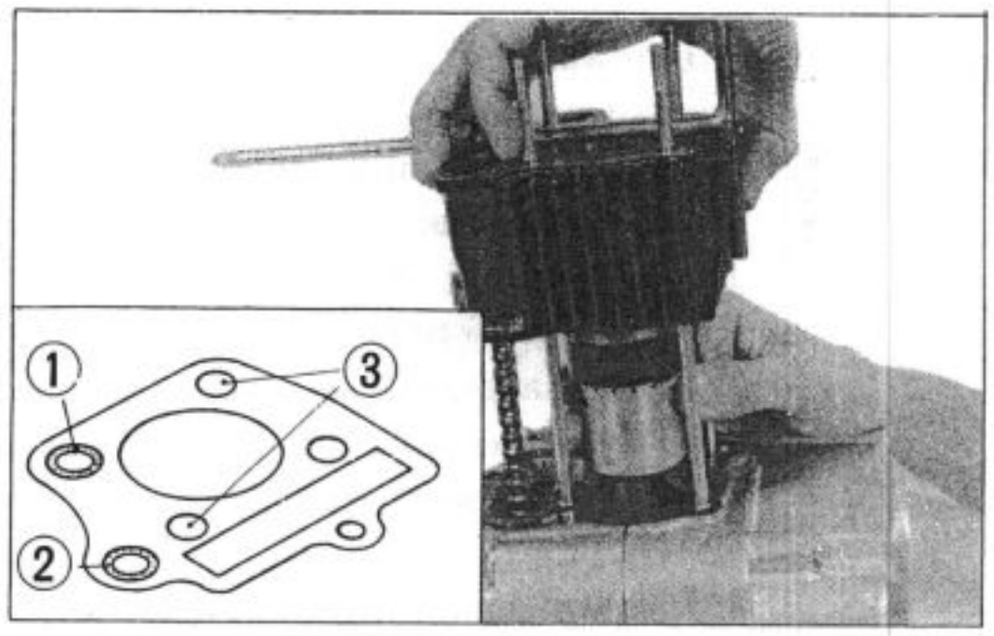

Fig. 3-17 1. 13.5mm rubber gasket
2. 16mm rubber gasket 3. Location of dowel pins

4. Adjust the valve timing and install the cylinder head.
   Valve Timing adjustment
   a. Align the "T" mark on the flywheel with the matching mark on the crankcase with the chain engaged with the crankshaft sprocket.
   b. Engage the top end of the chain on the cam sprocket with the O mark at the top.
      Holding the sprocket and the chain by hand, position the cylinder head over them and install the cam sprocket to the camshaft with the 5mm knock bolts with the O mark aligened with the notch in the cylinder head as shown.

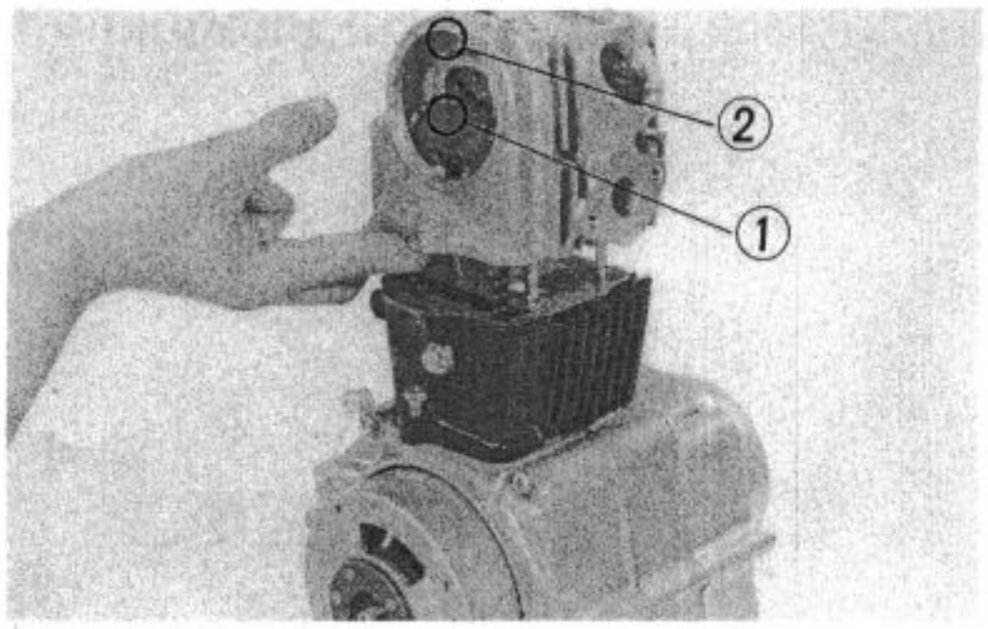

Fig. 3-18
1. "O" mark on cam sprocket 2. Notch in cylinder head

   c. If the "O" mark is not aligned with the notch, adjust by changing the cam chain engagement with sprocket.
5. Install the cylinder head cover.
   a. Tighten the head cover tightening nuts in a criss-cross pattern to prevent exhaust gas and oil leak. As shown in Fig. 3-19, install the washers and nuts.
6. Install the right and left cylinder head side covers.
7. Adjust the tappet clearance.
   Tappet clearance specification:
   0.05mm (0.002in. for intake/exhaust valves)
   This adjustment must be made when the engine is cold.

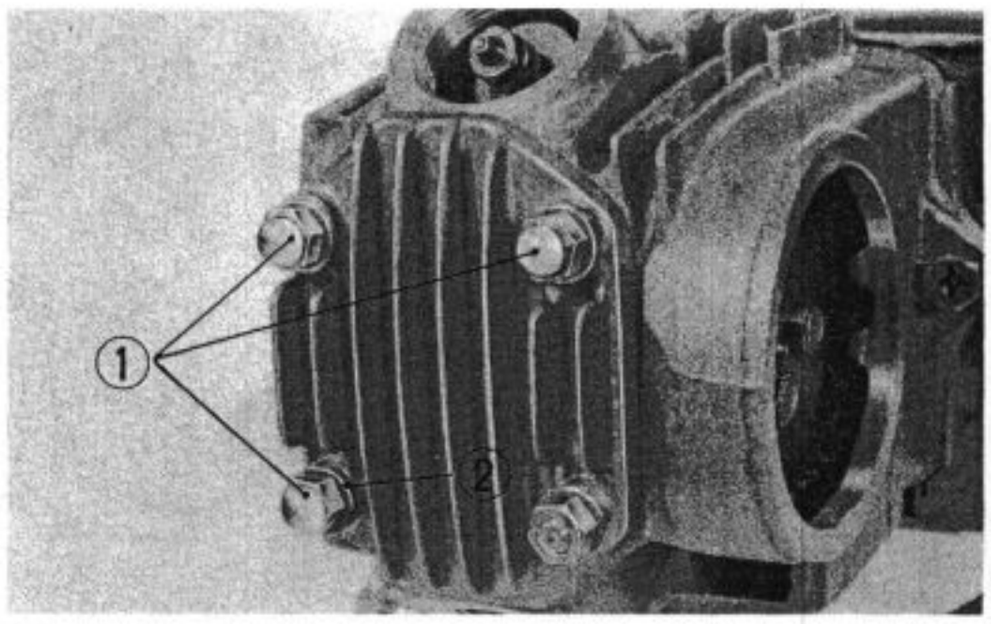

Fig. 3-19
1. Cap nuts 2. Copper washer

Cylinder head

1. When installing a new valve guide, drive it in with the valve guide installer (Tool No. 07942-3290100).
2. Then finish the valve guide with the valve guide reamer (Tool No. 07984-0980000).

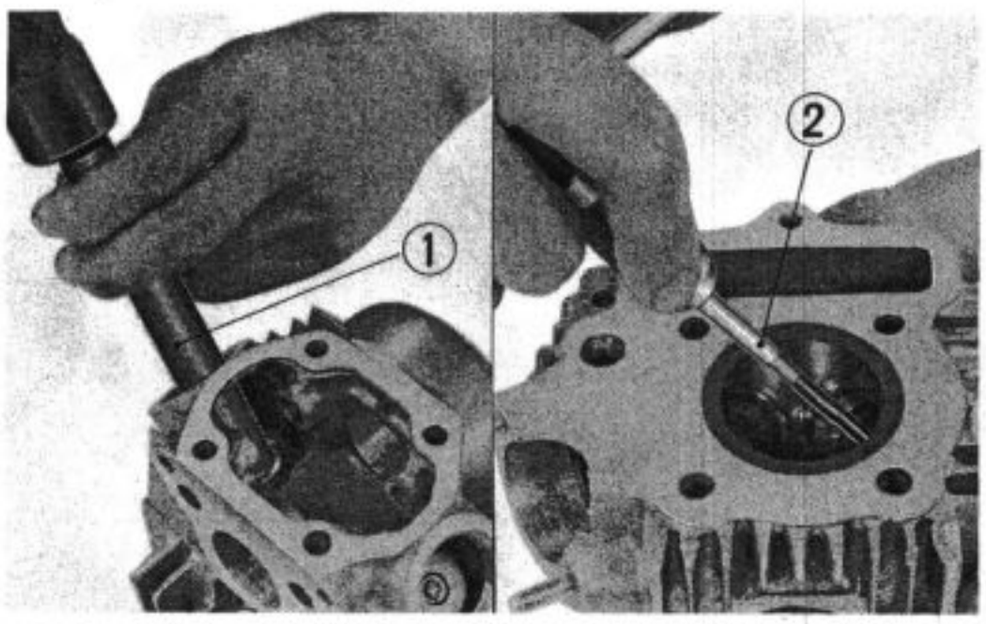

Fig. 3-20
1. Valve guide installer 2. Valve guide reamer

3. Install the valves and valve springs using the valve spring compressor in the same manner as in the disassembly procedure.
4. Check for proper rocker arm-to-shaft contact, and install them in place.

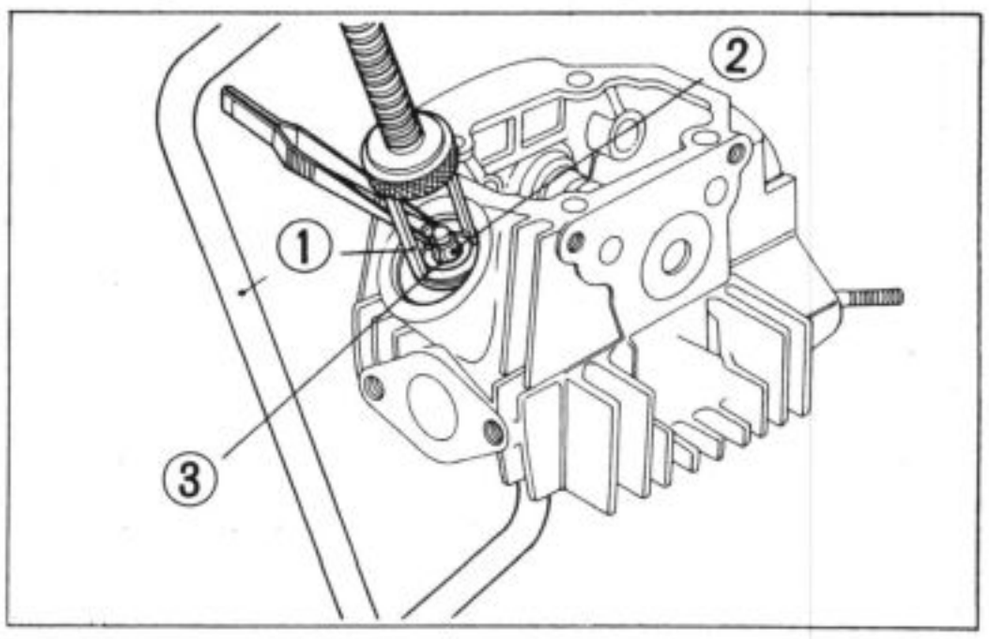

Fig. 3-21 1. Valve spring compressor
2. Valve cotter 3. Valve spring retainer

4 . Clutch, Oil Pump and Gear Shift Mechanism

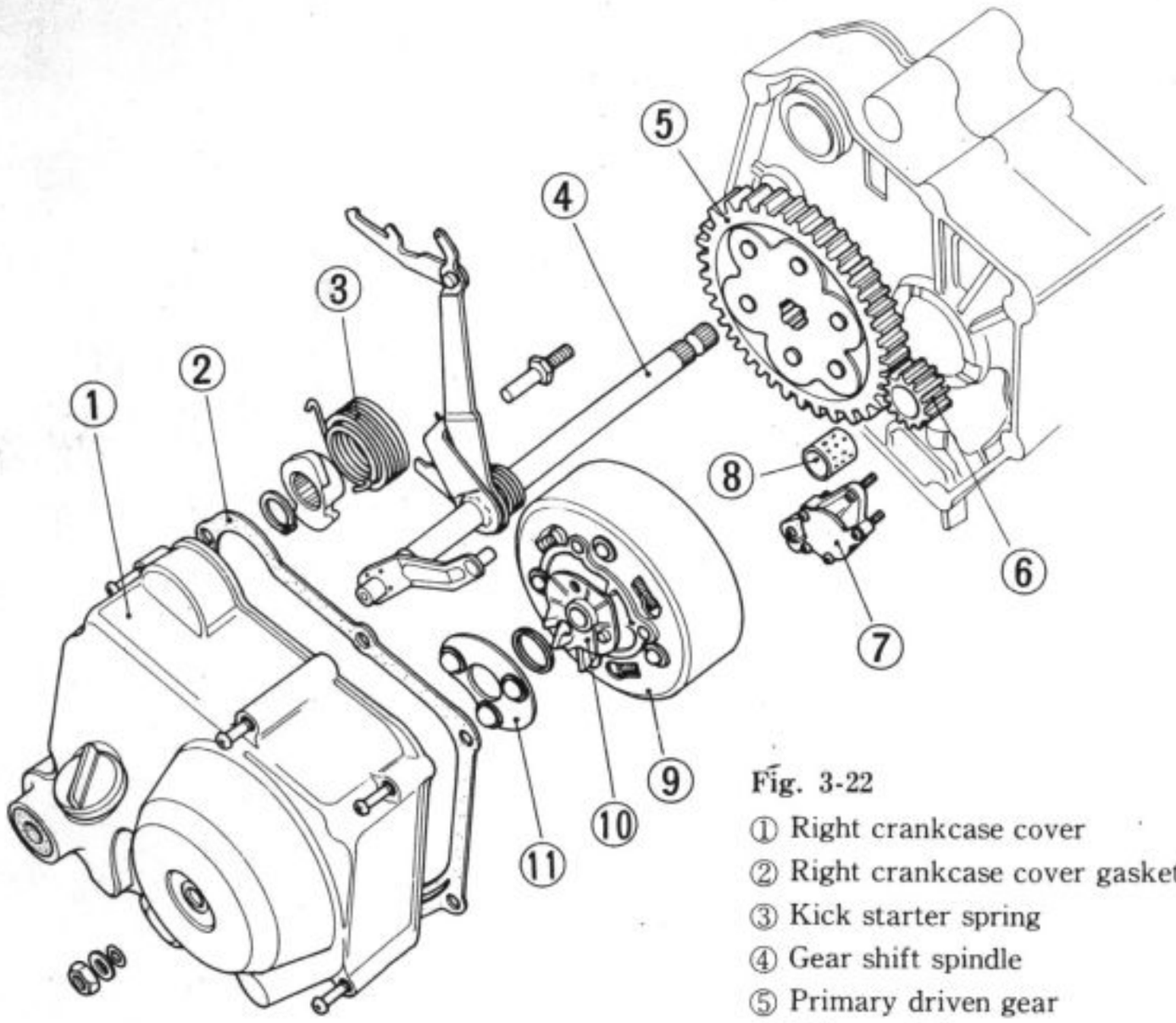

Fig. 3-22

① Right crankcase cover	⑦ Oil pump assembly
② Right crankcase cover gasket	⑧ Clutch center guide
③ Kick starter spring	⑨ Clutch assembly
④ Gear shift spindle	⑩ Clutch cam plate
⑤ Primary driven gear	⑪ Ball retainer
⑥ Primary drive gear	

Disassembly :

1. Remove the right crankcase cover.
2. Remove the clutch cam plate and clutch lever.
3. Remove the clutch outer cover.

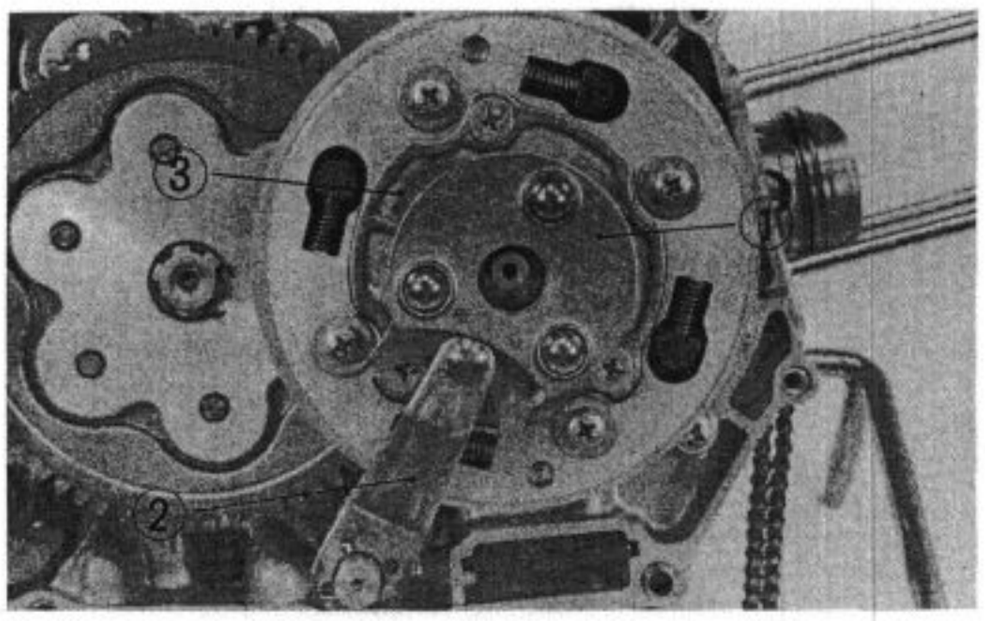

Fig. 3-23 1. Clutch cam plate
2. Clutch lever 3. Clutch outer cover

4. Remove the clutch assembly.
   a. Straighten the locking tabs of 14mm lock washer and remove the 14mm lock nut with the 14mm lock nut wrench (Tool No. 07916-2830000) and clutch outer holder (Tool No. 07923-040000). Then remove the clutch assembly.

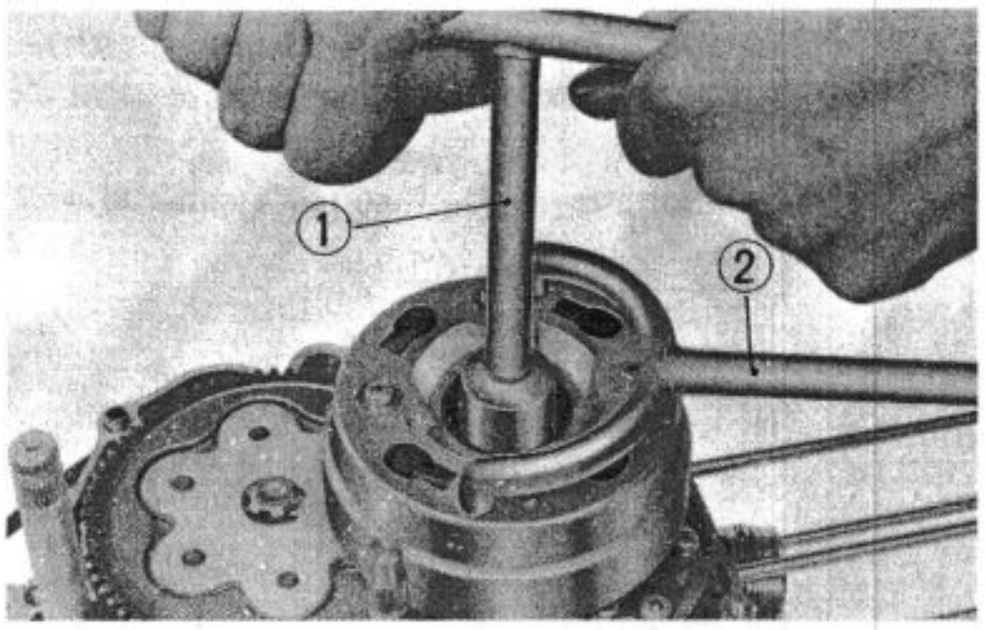

Fig. 3-24
1. 14mm lock nut wrench 2. Clutch outer holder

5. Remove the 17mm snap ring and remove the primary driven and drive gears.
6. Remove the 6mm screws and remove the oil pump assembly.
   a. When disassembling the oil pump, remove the oil pump cover first. Then remove the outer and inner rotors.

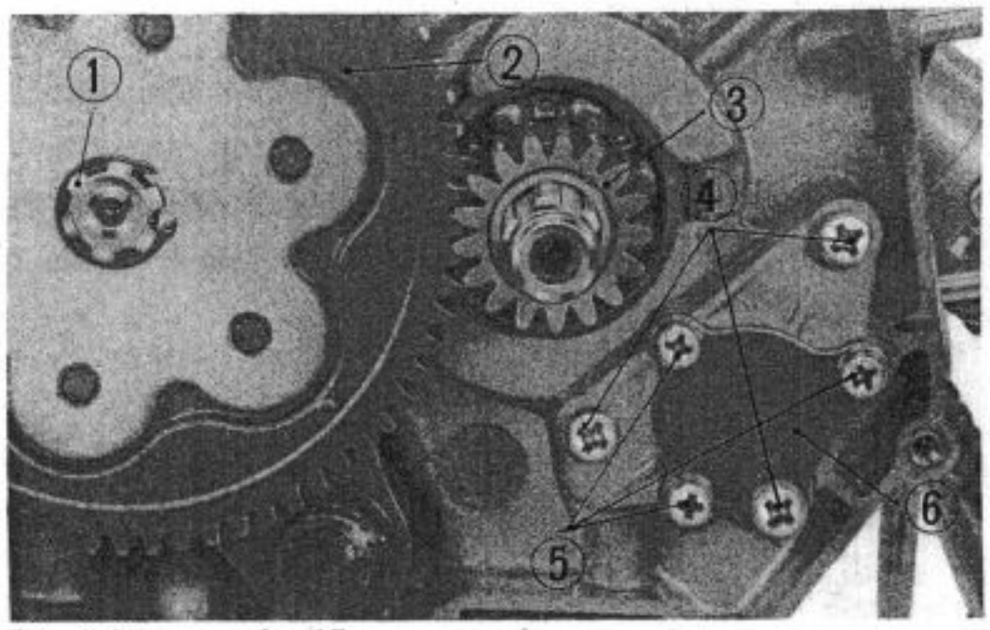

Fig 3-25 1. 17mm snap ring
2. Primary driven gear 3. Primary drive gear
4. 6mm screws 5. 5mm screws 6. Oil pump cover

7. Detach the kick starter spring from the hook located at the crankcase.
8. Remove the 16mm snap ring and remove the kick spring retainer and kick starter spring.
   a. Remove the kick starter spindle by separating the crankcase into two parts.

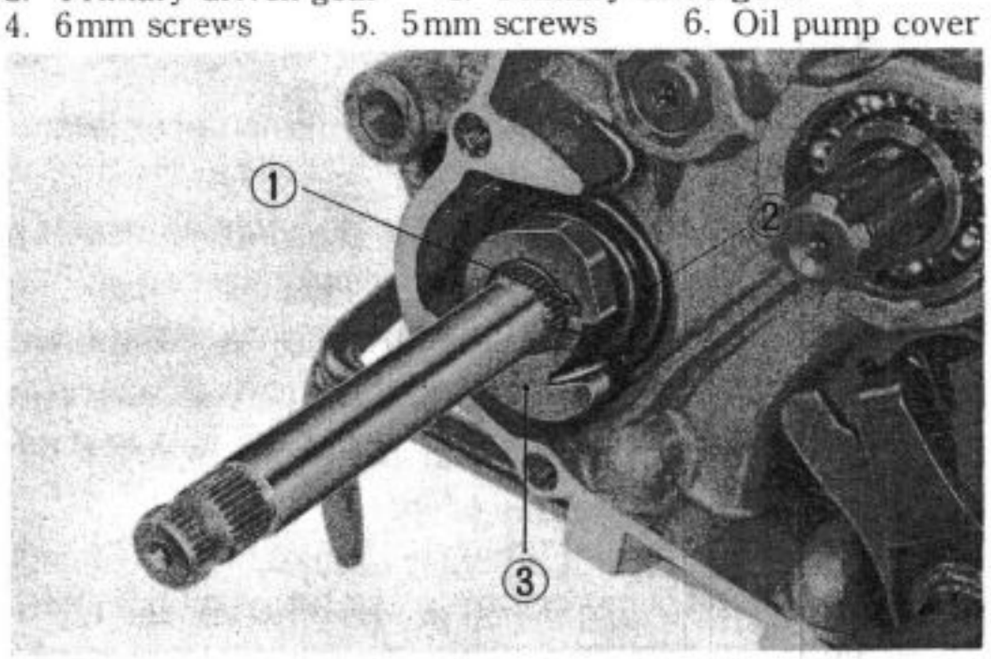

Fig. 3-26 1. 16mm snap ring
2. Kick starter spring 3. Kick spring retainer

9. Remove the shift drum stopper.
10. Remove the gear shift arm and spindle.

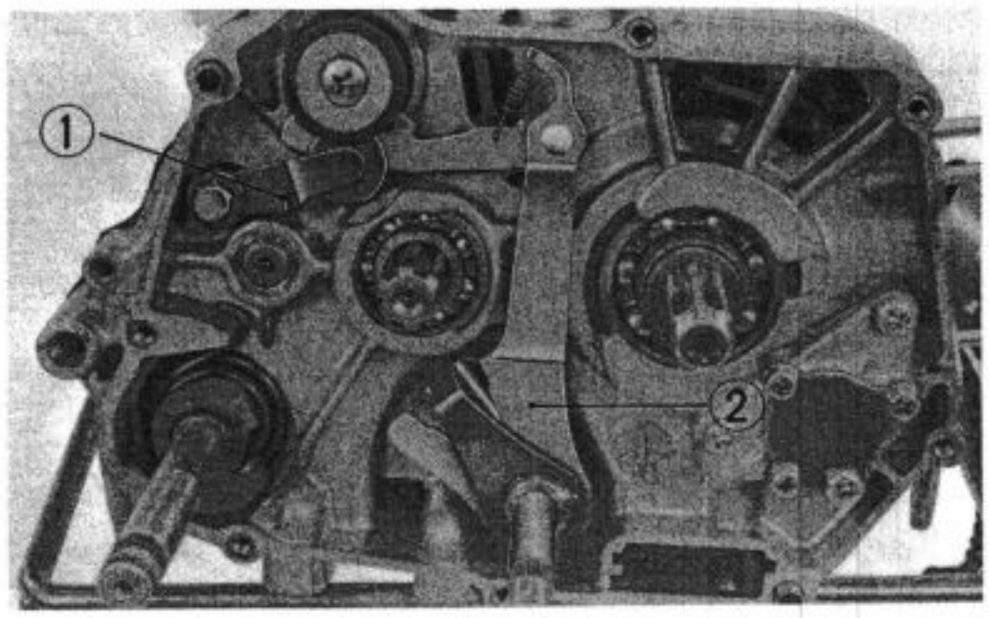

Fig. 3-27
1. Shift drum stopper 2. Gear shift arm and spindle

〈 Clutch 〉

1. Remove the 101.5mm set ring and remove the clutch plates, clutch friction discs, drive gear outer and clutch center.
2. Remove the 5mm screws and remove the clutch outer drive plate and clutch springs.

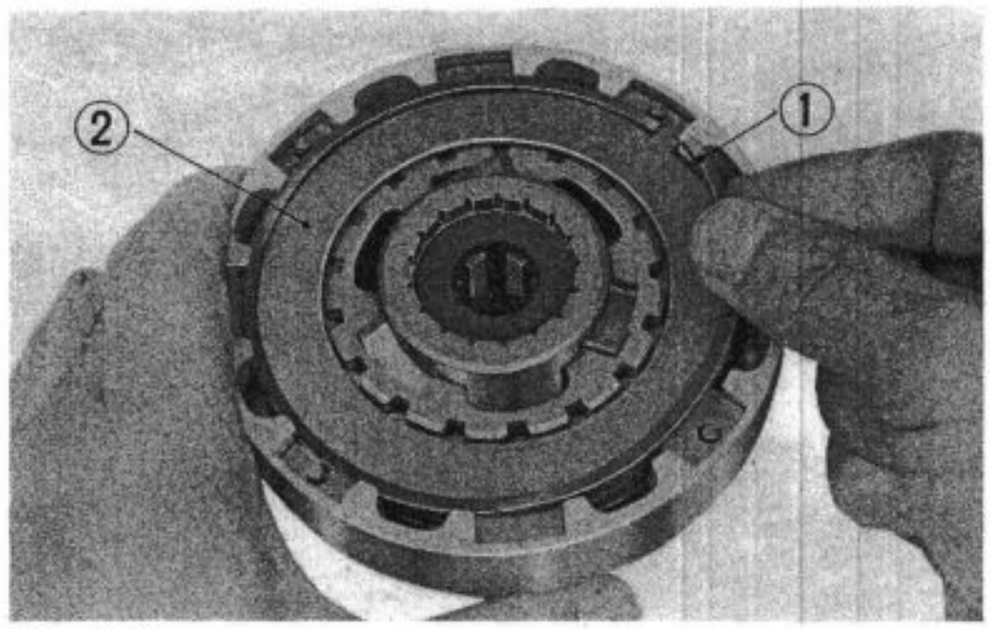

Fig. 3-28
1. 101.5mm set ring 2. Clutch plate

Inspection :

1. Measure the clutch friction disc thickness.
2. Check the clutch plates for face runout.
3. Measure the oil pump body-to-outer rotor clearance.
4. Measure the oil pump rotor-to-cover clearance.

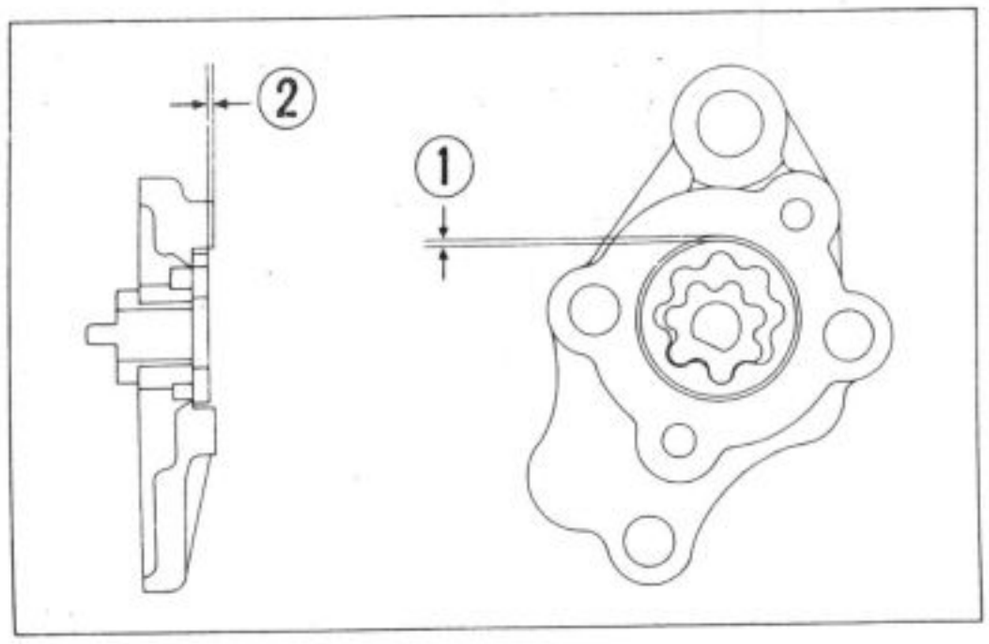

Fig. 3-29 1. Oil pump body-to-outer rotor clearance
2. Oil pump body-to-pump cover clearance

Assembly :

1. Install the shift drum stopper after installing the gear shift spindle.
   a. After installing the shift drum stopper, operate the gear change pedal to check for proper operation.
2. As shown in Fig. 3-30, install the kick starter spring.
   a. After installing the kick starter spring, operate the kick starter pedal and check to see if the kick starter spindle operates properly.
   b. Do not forget to install the 16mm snap ring.
3. Install the oil pump by fitting the tab of oil pump drive shaft in the recess in cam chain guide sprocket spindle on the crankcase side.
4. Making sure that the rotors move smoothly, install the oil pump cover.

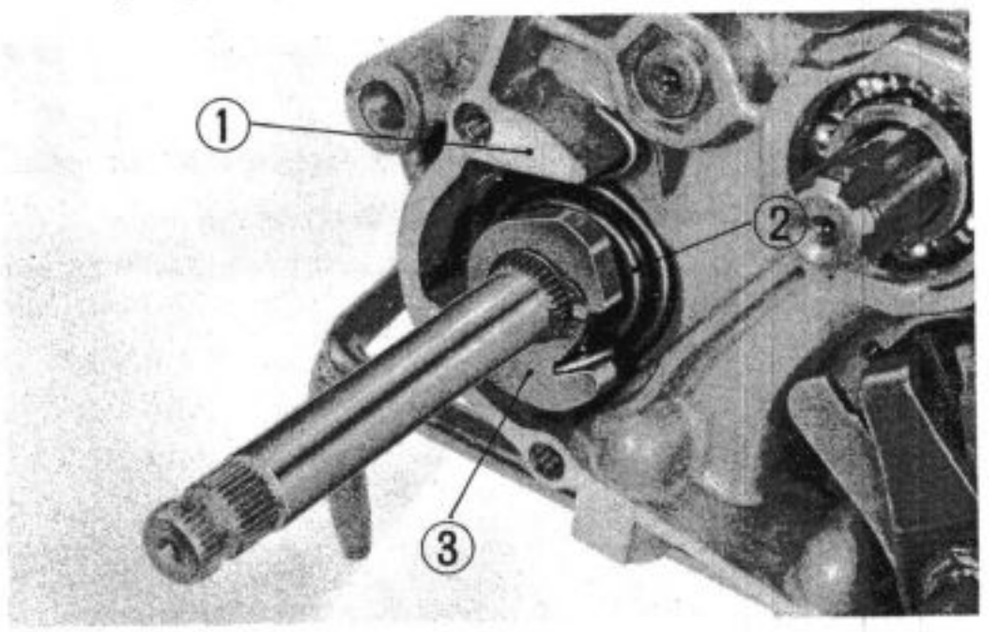

Fig 3-30 1. Crankcase 2. Kick starter spring
3. Kick spring retainer

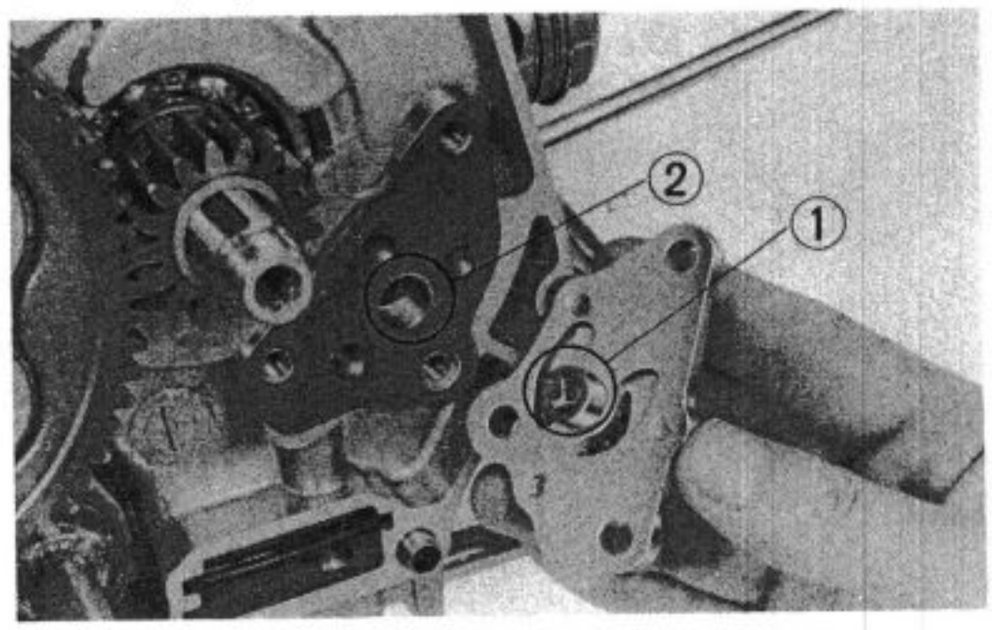

Fig. 3-31 1. Tab of oil pump drive shaft
2. Recess in cam chain guide sprocket spindle

5. Set the clutch springs to the drive plate and then install them to the clutch outer.
   a. Compress the clutch outer and secure it with the 5mm screws.
6. Install the clutch damper springs to the clutch outer as shown in Fig. 3-32.

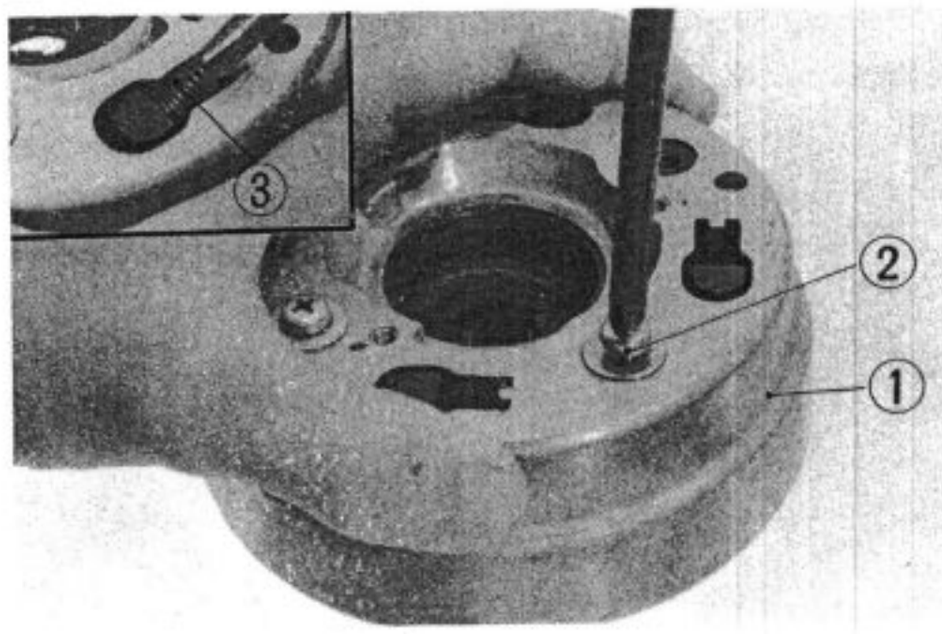

Fig. 3-32 1. Clutch outer
2. 5mm screw 3. Clutch damper spring

7. Install the eight rollers in the drive plate grooves in the clutch outer.
8. Assemble the drive gear outer and clutch center as shown in Fig. 3-33, and then install the assembly to the clutch outer.

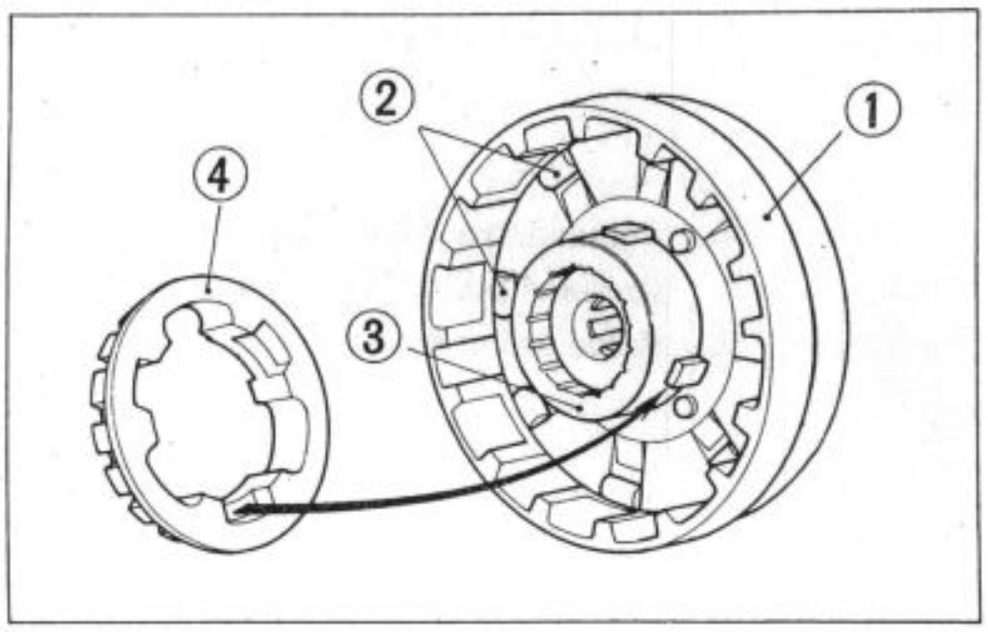

Fig. 3-33 1. Clutch outer 2. Rollers
3. Drive gear outer 4. Clutch center

9. Install the clutch plates and clutch friction discs as shown in Fig. 3-34 and secure them with the 101.5mm set ring.
   a. Do not forget to install the clutch free springs.
   b. Do not allow the clutch plates to be wet with oil or grease.
10. Set the primary drive gear to the clutch assembly (drive gear outer) and mesh it with the primary driven gear.

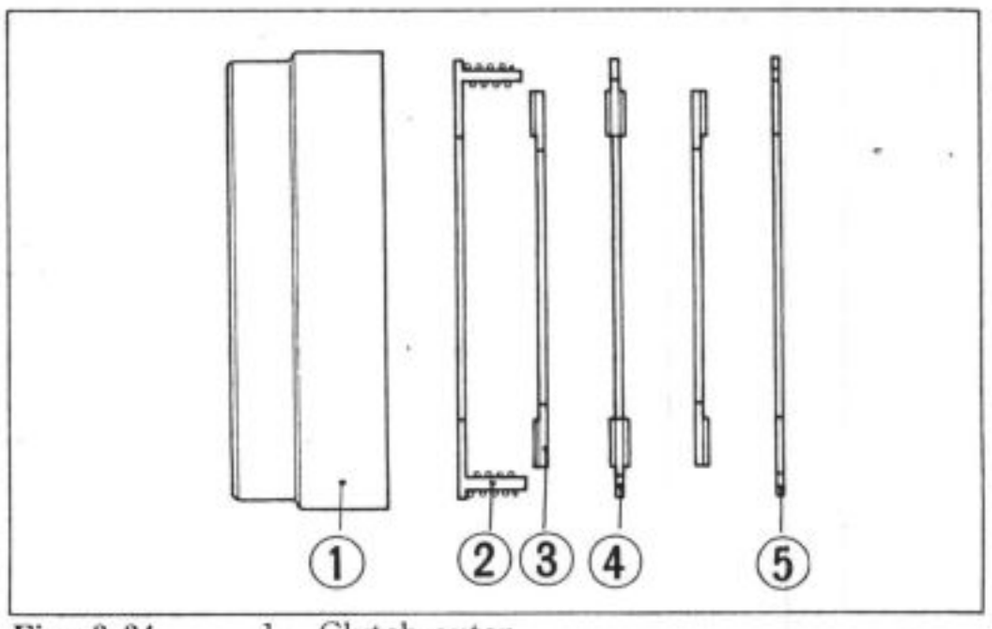

Fig. 3-34 1. Clutch outer
2. Clutch plate A 3. Clutch friction disc A
4. Clutch friction disc B 5. Clutch plate B

11. Tighten the clutch assembly with the 14mm lock nut and bend the locking tabs of 14mm lock washer against the flats of the lock nut.
   a. Install the 14mm lock washer and clutch lock washer in this order. Face the "OUTSIDE" mark on the clutch lock washer toward the outside.

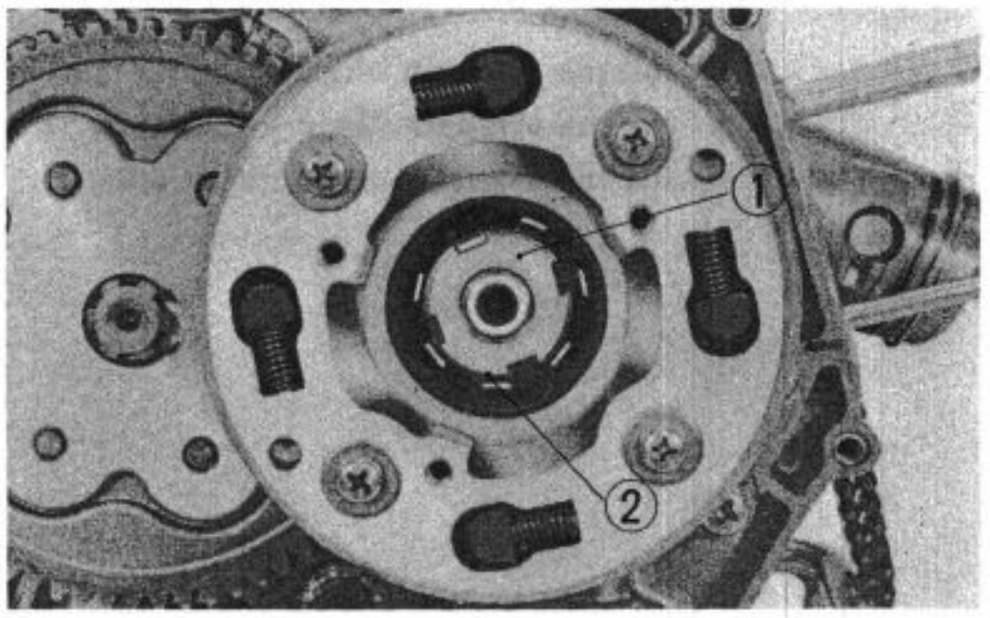

Fig. 3-35
1. 14mm lock nut 2. 14mm lock washer

12. Install the right crankcase cover.
   a. Do not forget to install the 8 × 12mm dowel pins.
   b. Make sure that the cover gasket is in correct position.
13. Adjust the clutch.

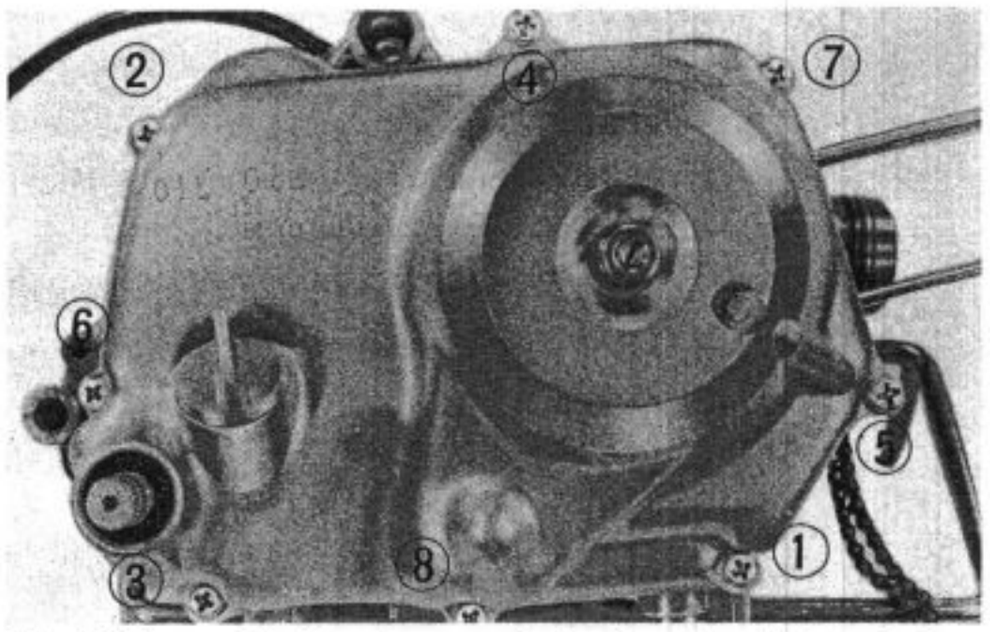

Fig. 3-36 Tighten in numerical order Install dowel pins in positions 1 and 2

5. Flywheel A.C. Generetor and Cam Chain

Disassembly :

1. Remove the 10mm nut and remove the flywheel with the flywheel puller (Tool No. 07933-0010000).
2. Remove the stator assembly.

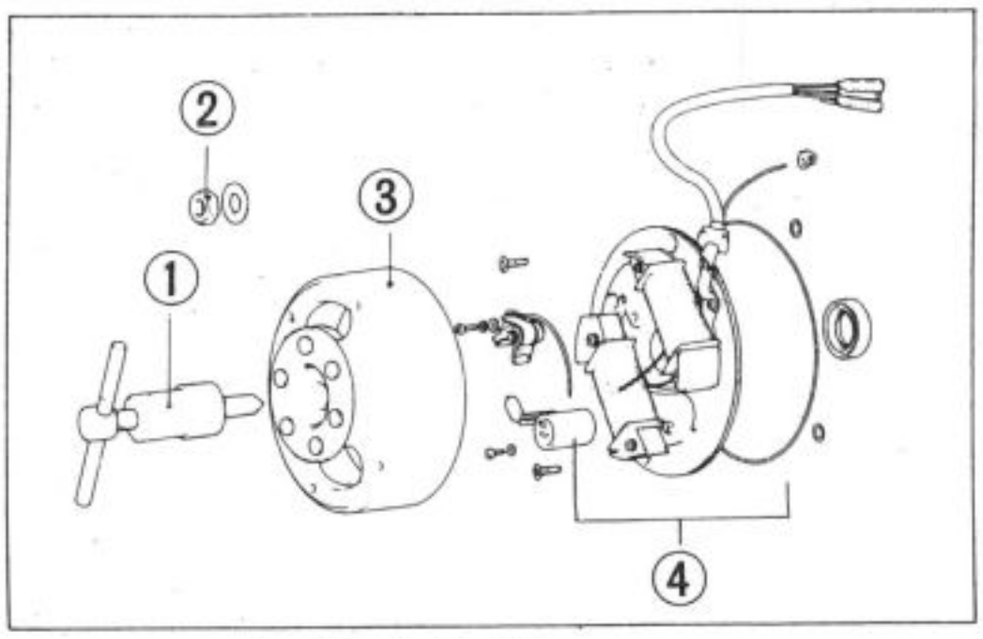

Fig. 3-37 1. Flywheel puller 2. 10mm nut 3. Flywheel 4. Stator assembly

3. Loosen the 8mm lock nut and tensioner adjusting bolt.
4. Remove the 14mm sealing bolt and tensioner adjusting bolt B, and remove the springs and push rod.
5. Remove the cam chain tensioner pivot and remove the tensioner arm.
6. Remove the cam chain guide sprocket from the cam chain guide sprocket spindle by separating the crankcase into two parts.

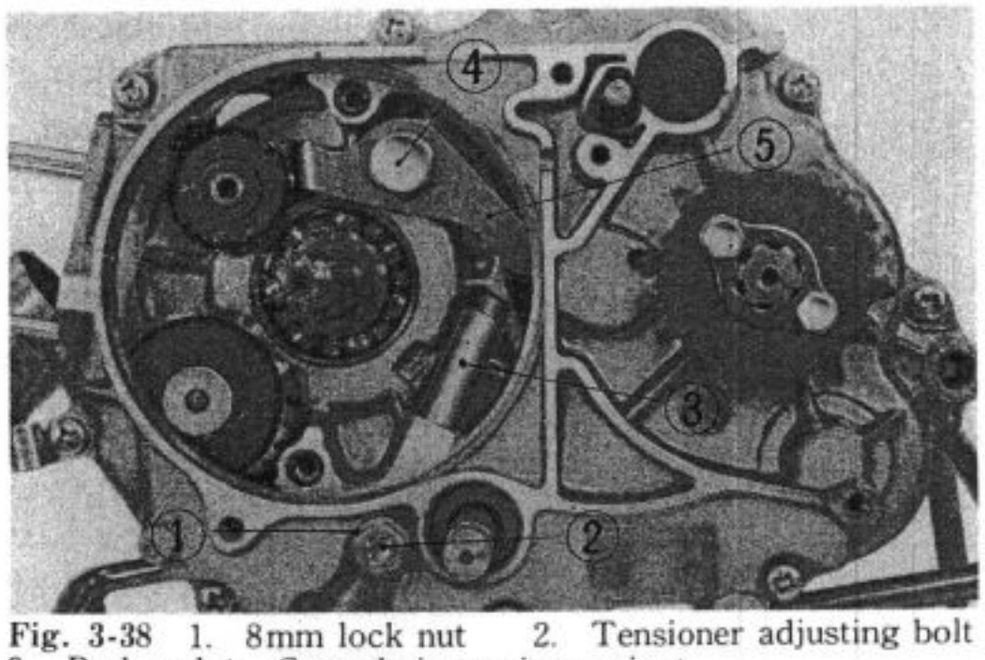

Fig. 3-38 1. 8mm lock nut 2. Tensioner adjusting bolt 3. Push rod 4. Cam chain tensioner pivot 5. Tensioner arm

Inspection :

1. Check the cam chain tensioner springs for tension.
2. Check the cam chain guide roller for wear.
3. Check the cam chain guide sprocket for wear.

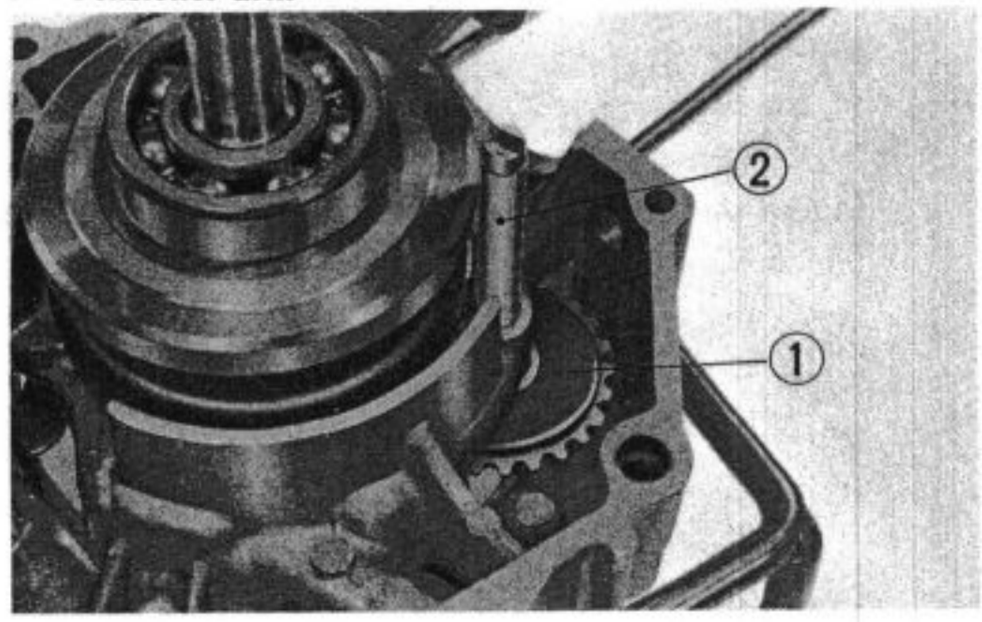

Fig. 3-39 1. Cam chain guide sprocket 2. Cam chain guide sprocket spindle

Assembly :

1. Install the cam chain on the timing sprocket and install the cam chain guide roller and cam chain tensioner arm.
2. Install the cam chain tensioner push rod and springs.
   a. Install the longer spring first.
   b. Tighten the tensioner adjusting bolt B and 14mm sealing bolt after adjusting the cam chain tension.

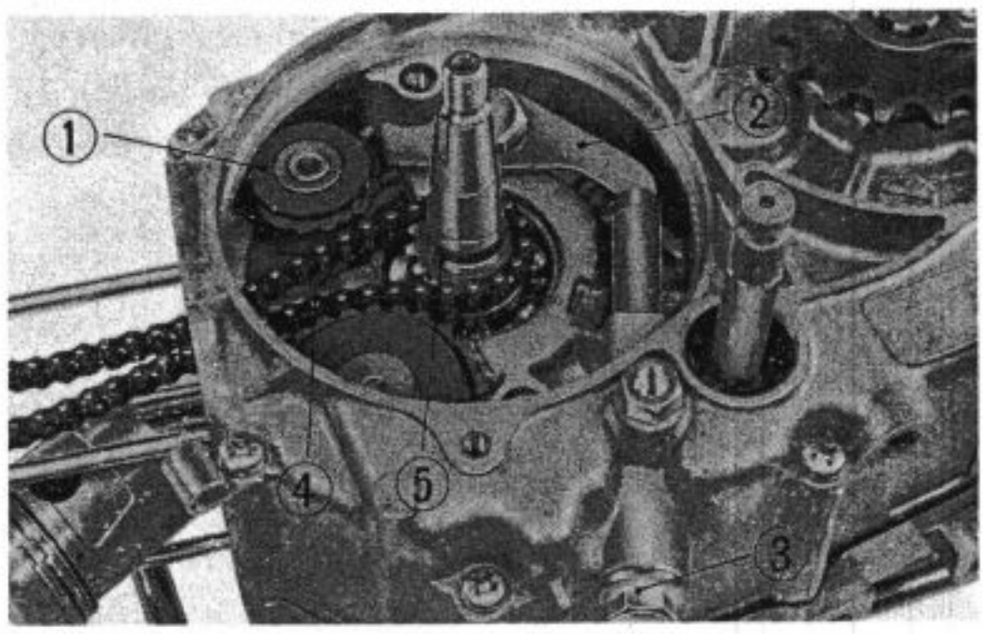

Fig. 3-40 1. Cam chain guide roller 2. Cam chain tensioner arm 3. 14mm sealing bolt 4. Cam chain 5. Timing sprocket

3. After installing the engine, adjust the cam chain tension.
4. Install the stator assembly.
   a. Do not forget to install the two O-rings.
5. Install the flywheel by fitting the woodruff key in the key-way in the flywheel.
6. Check the ignition timing and point gap and adjust them if necessary. (See page 2.)

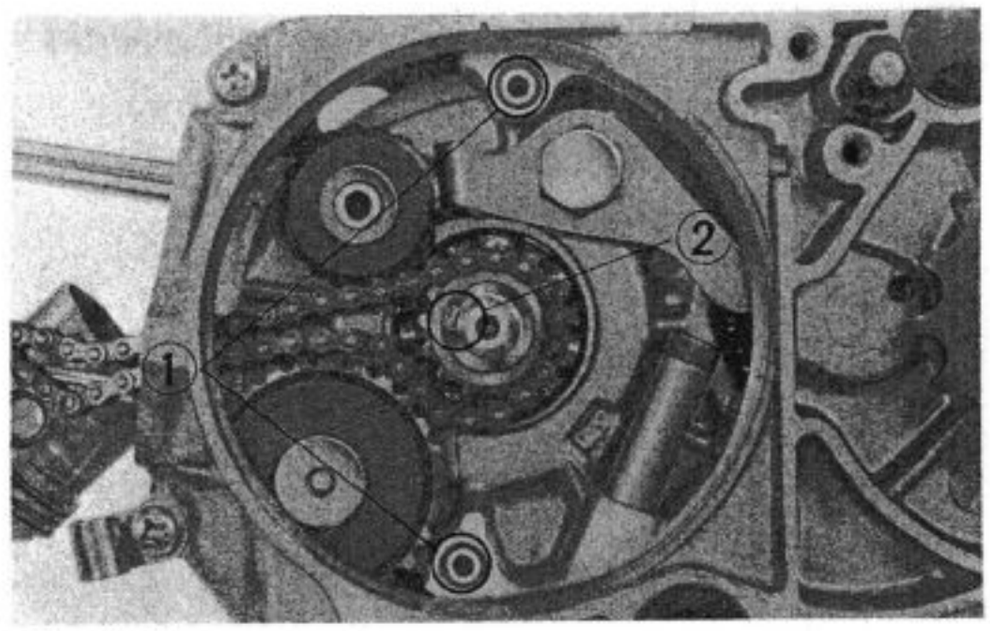

Fig. 3-41
1. O-rings 2. Woodruff key

6. Crankshaft, Transmission, Gear Shift Forks and Kick Starter Spindle

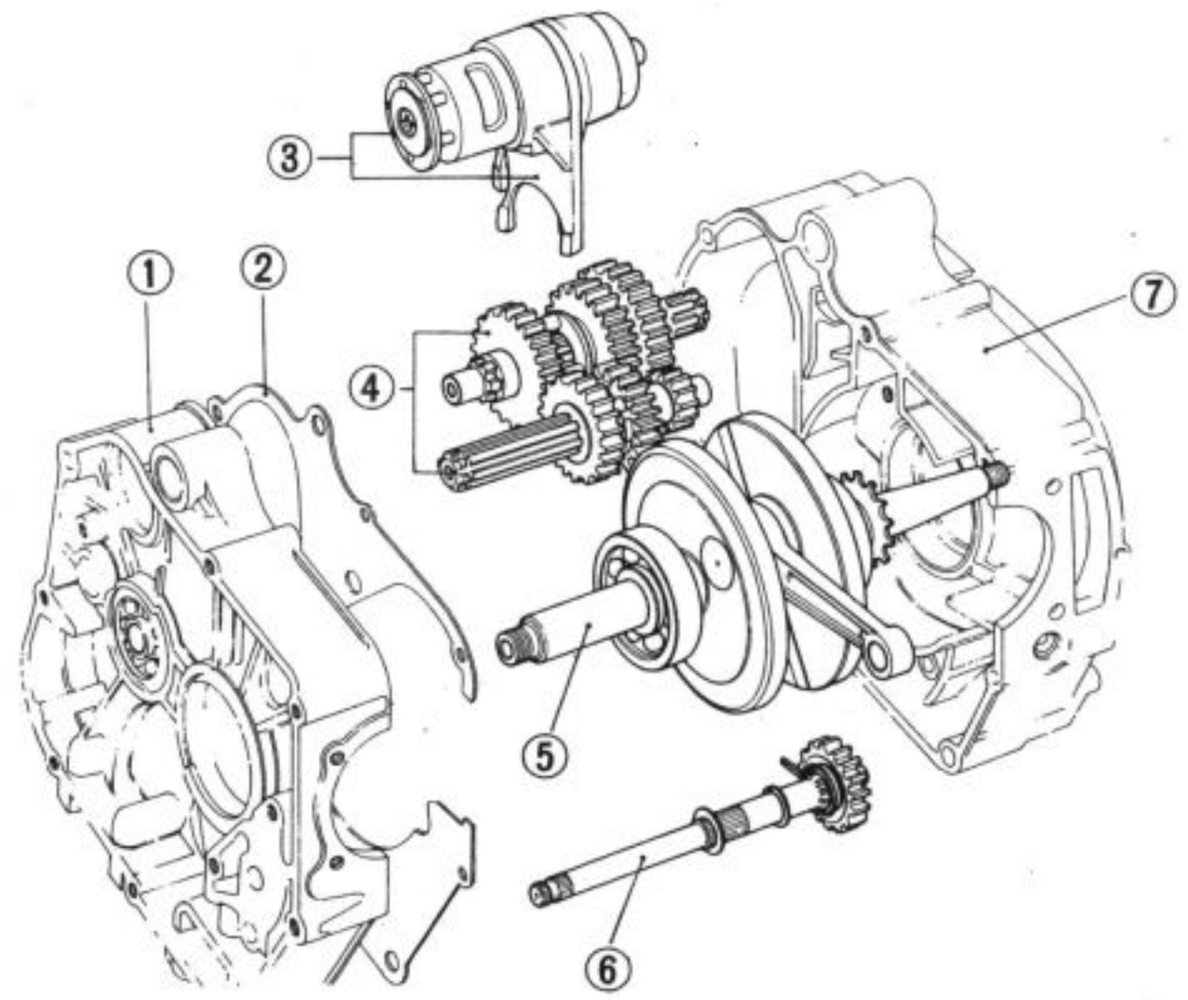

Fig. 3-42
① Right crakcase
② Crankcase gasket
③ Gear shift drum and shift fork
④ Transmission assembly
⑤ Crankshaft assembly
⑥ Kick starter spindle assembly
⑦ Left crankcase

Disassembly :

1. Remove the engine. (See page 7.)
2. Seeing page 9, remove the cylinder head.
3. Seeing page 14, remove the right crankcase cover and remove the gear shift mechanism. It is not necessary to remove the oil pump.
4. Remove the flywheel A.C generator assembly. (See page 18.)
5. With the left crankcase facing upward, remove the eight 6mm screws.
6. Remove the drive sprocket.
7. Remove the 19mm rubber plug and remove the 6mm bolt.

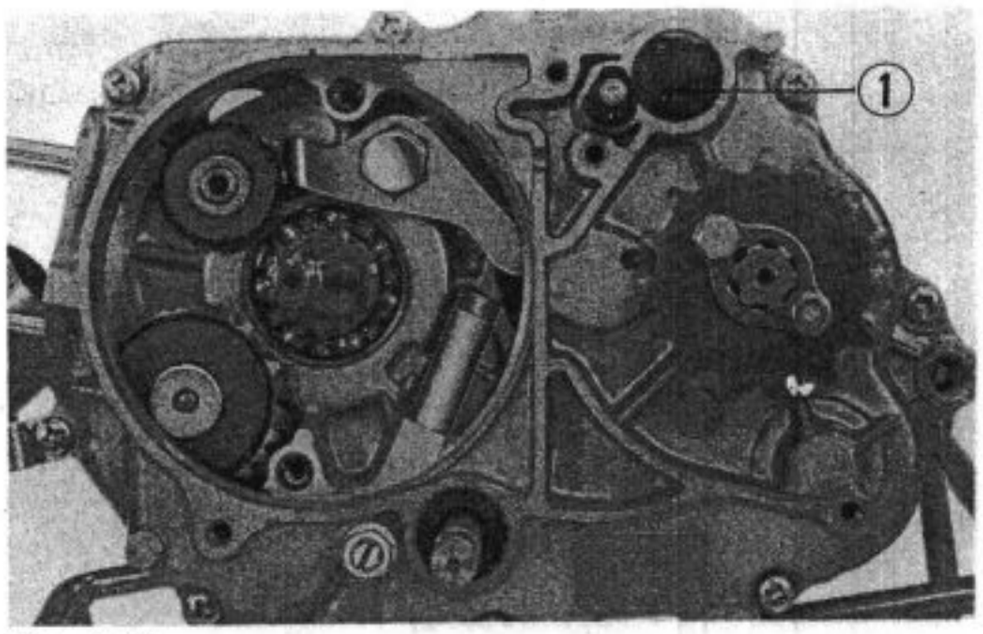

Fig. 3-43
1. 19mm rubber plug

8. With the right crankcase facing upward, separate the crankcase into two parts.
9. Remove the crankshaft, transmission, gear shift drum and kick starter spindle.

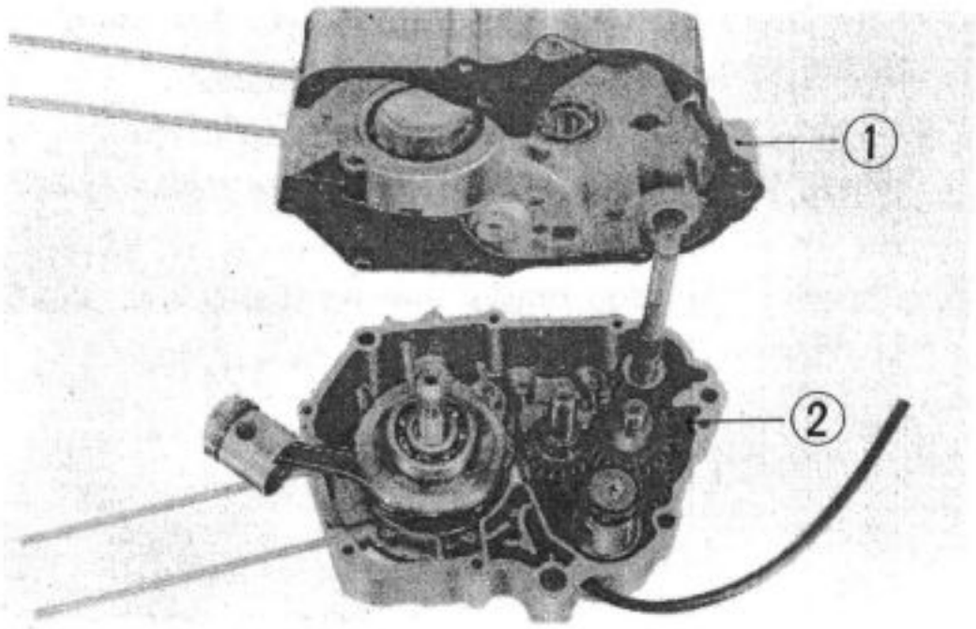

Fig. 3-44
1. Right crankcase 2. Left crankcase

10. Remove the guide pin clip and pull out the guide pin.
11. Remove the 17mm snap rings and remove the gear.
12. Remove the 20mm set ring and remove the starter pinion and ratchet spring.

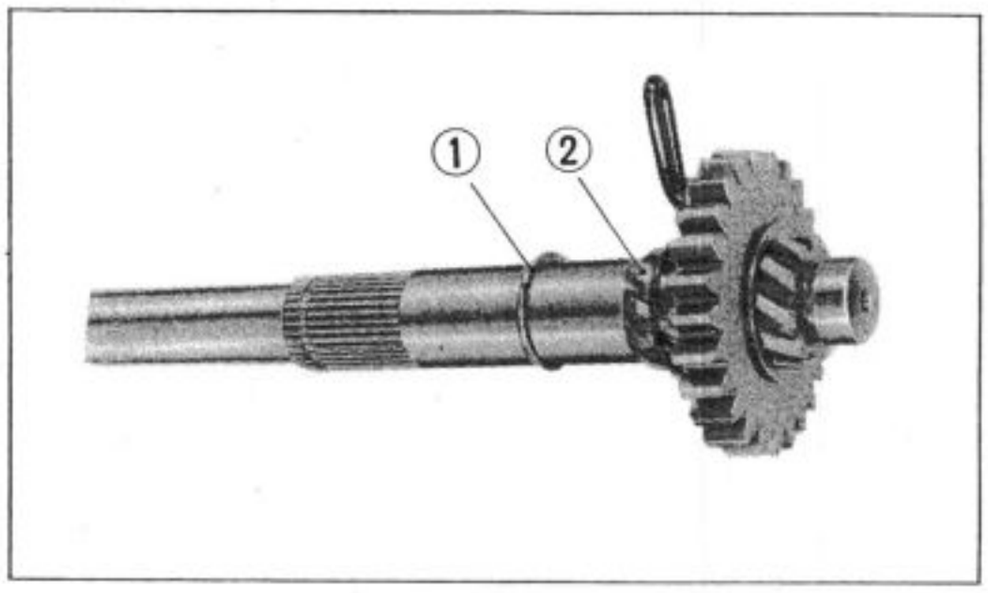

Fig. 3-45
1. 17mm snap rings 2. 20mm set ring

Inspection:

1. Measure the gear shift fork-to-drum clearance.
2. Measure the gear shift drum boss OD.
3. Measure the shift fork finger thickness. Also check the fingers for wear or bend.
4. Check the neutral switch rotor for wear or damage.
5. Measure the gear backlash.
6. Check the dog of each gear for wear or damage, and replace if necessary. Also check to see if each gear moves smoothly along the shaft spline.

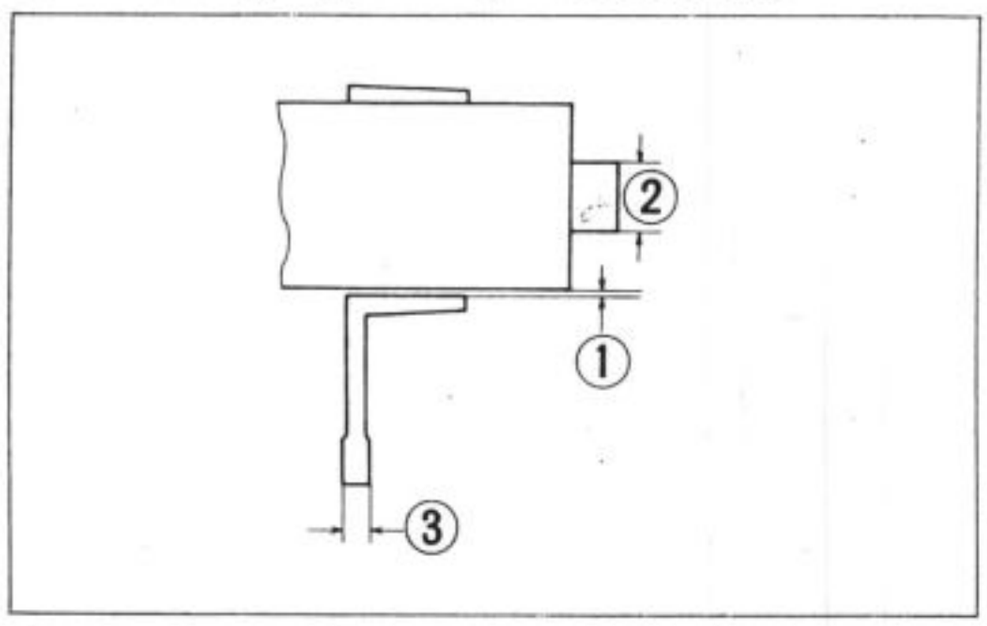

Fig. 3-46 1. Gear shift fork-to-drum clearance
2. Gear shift drum boss OD 3. Shift fork finger thickness

7. Measure the connecting rod small end ID.
8. Measure the crankpin-to-connecting rod big end clearance.
9. Measure the connecting rod side clearance.

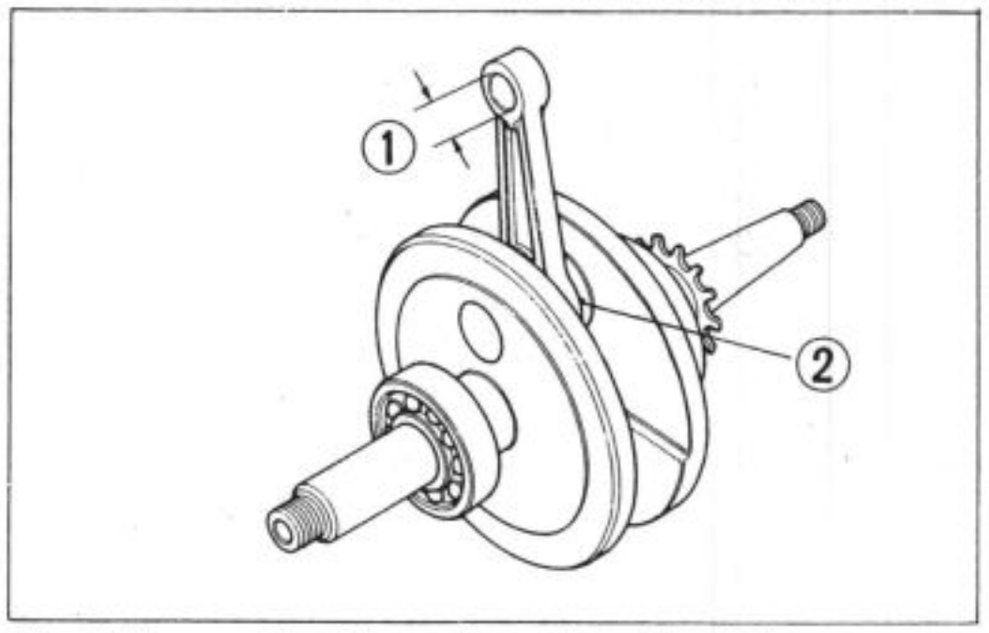

Fig. 3-47 1. Connecting rod small end ID
2. Connecting rod side clearance

Assembly :

1. As shown in Fig. 3-48, install the shift forks to the drum.
   a. Install the guide pin clips properly.

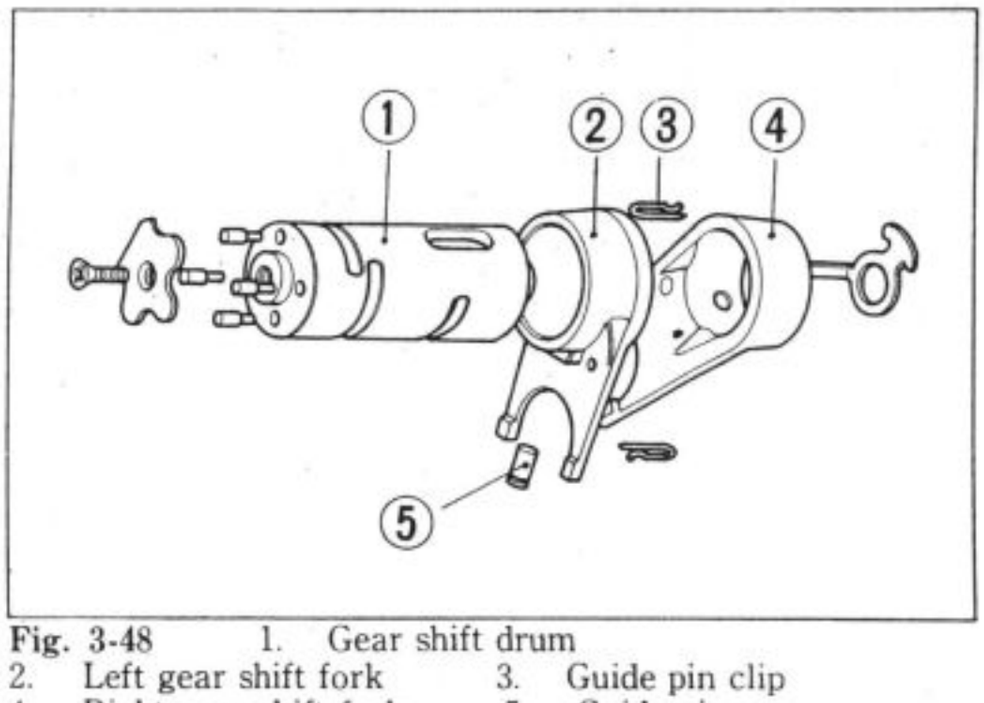

Fig. 3-48
1. Gear shift drum
2. Left gear shift fork
3. Guide pin clip
4. Right gear shift fork
5. Guide pin

2. Install the gears as shown in Fig. 3-49.

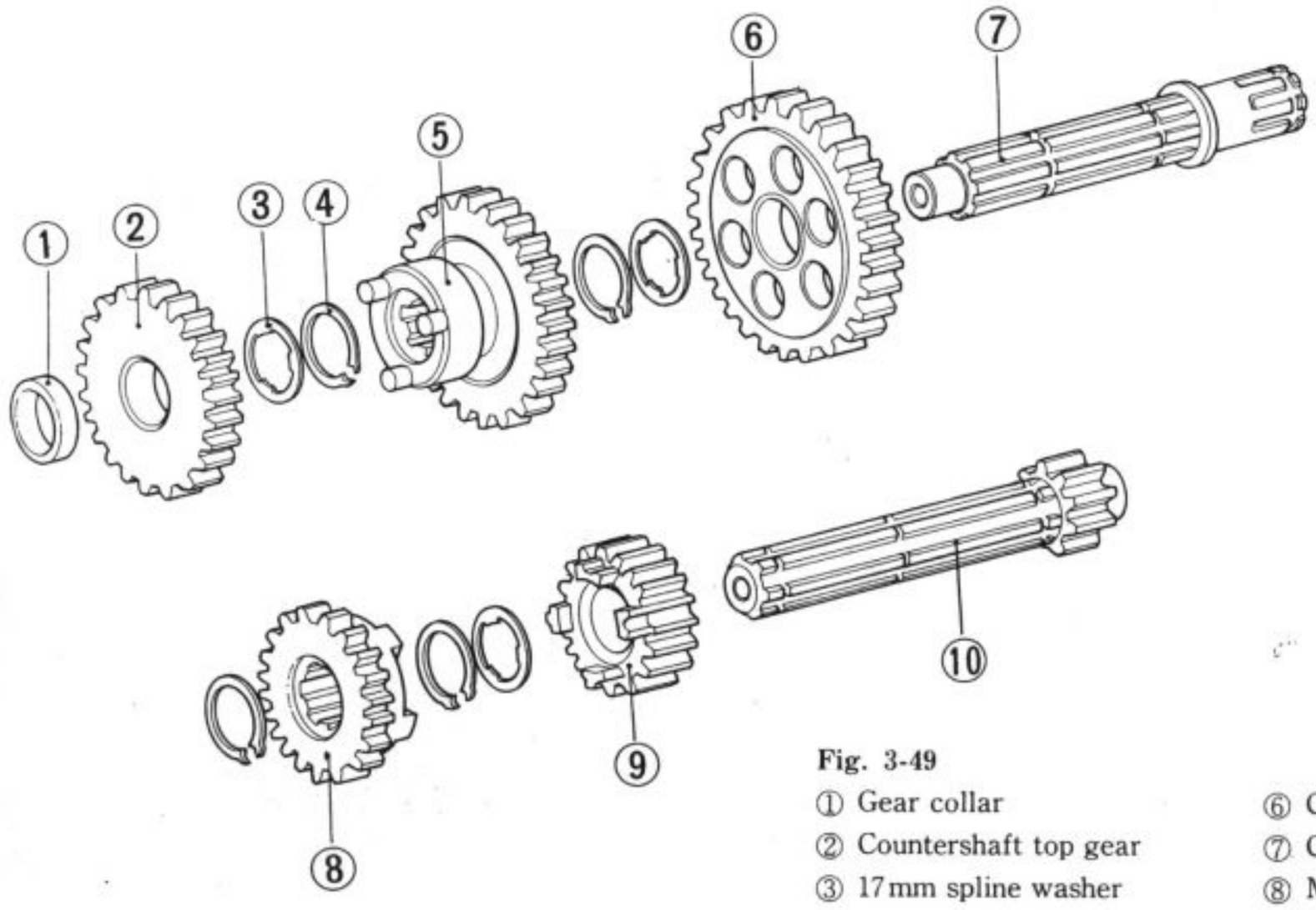

Fig. 3-49
① Gear collar
② Countershaft top gear
③ 17mm spline washer
④ 17mm snap ring
⑤ Countershaft second gear
⑥ Countershaft low gear
⑦ Countershaft
⑧ Main shaft top gear
⑨ Main shaft second gear
⑩ Main shaft

3. Place the left crankcase on a stand.
4. Install the transmission, gear shift drum and shift forks.
5. Install the crankshaft.
   a. Carefully press it in a beeline.
6. Install the kick starter spindle.
7. Install the right crankcase.
   a. Do not forget to install the thrust washer.
   b. After tightening the crankcase, check to see if the rotating parts rotate smoothly.

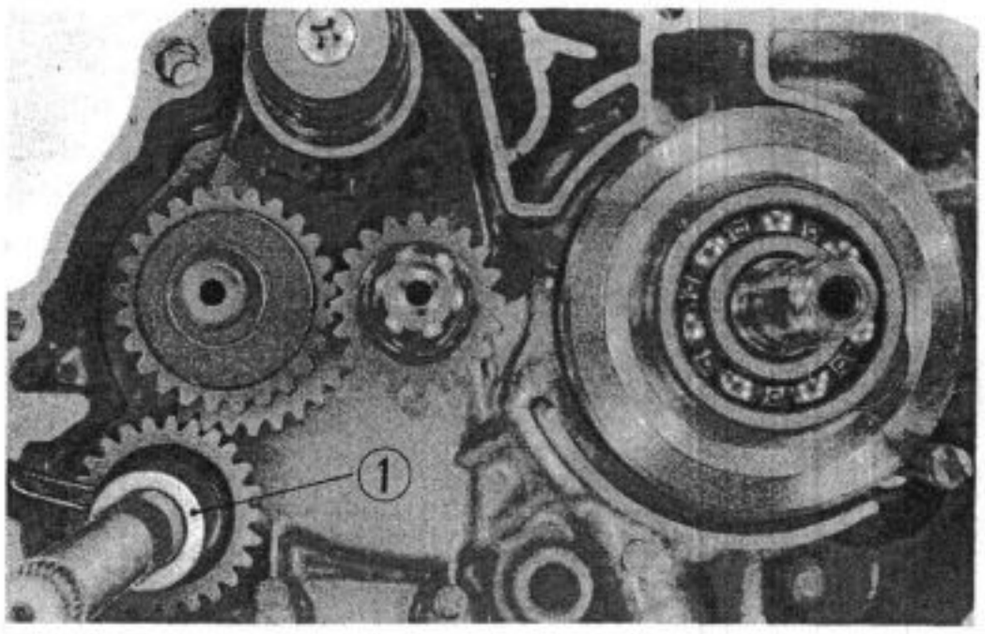

Fig. 3-50
1. 13.5mm thrust washer

7. Carburetor

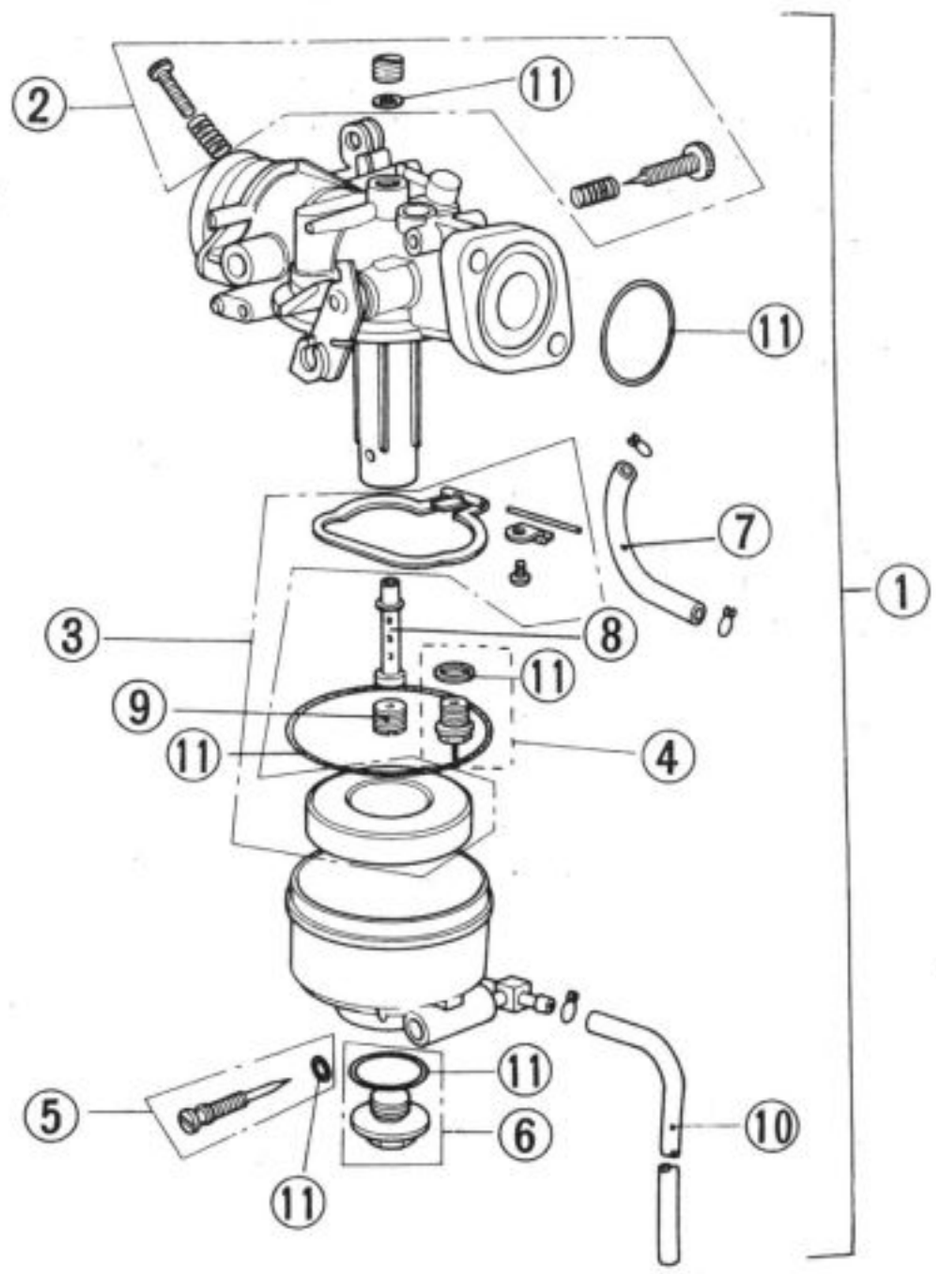

Fig. 3-51
① Carburetor assembly
② Screw set A
③ Float set
④ Float valve set
⑤ Drain screw set
⑥ Screw set B
⑦ 3.5 × 60mm fuel tube
⑧ Main nozzle
⑨ Main jet
⑩ 3.5 × 240mm fuel tube
⑪ Gasket set

Removal:

1. Remove the carburetor cover.
2. Remove the two carburetor inlet pipe 6mm bolts.
3. With the fuel cock lever placed in the "STOP" position, disconnect the fuel tubes.
4. Remove the carburetor assembly from the connecting tube. Then loosen the lock nuts and disconnect the cables.
5. Loosen the 6mm screws and disconnect the inlet pipe.
6. Loosen the insulator band and remove the cable stay plate from the inlet pipe flange.

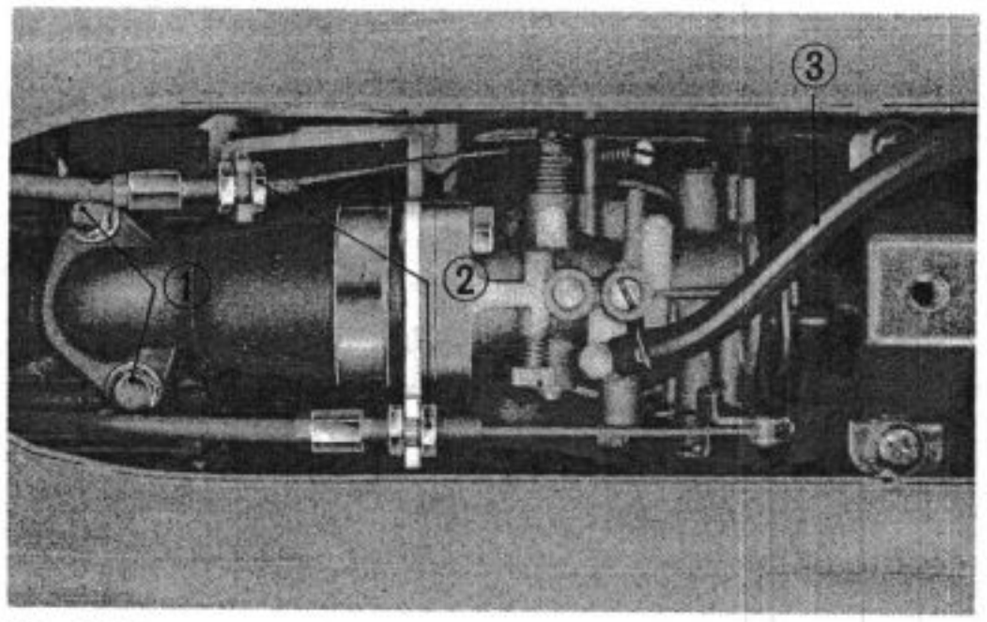

Fig. 3-52
1. 6mm bolt 2. Lock nut 3. Fuel tube

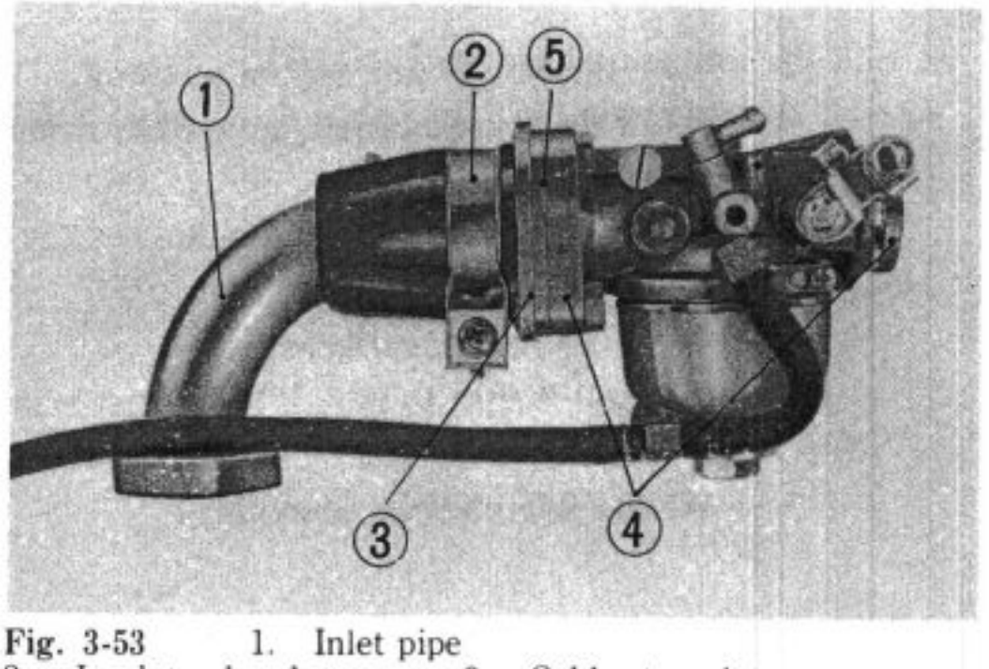

Fig. 3-53 1. Inlet pipe
2. Insulator band 3. Cable stay plate
4. Carburetor assembly 5. Inlet pipe flange

Key to installation :

1. Align the matching mark on the inlet pipe with that on the cable stay plate.

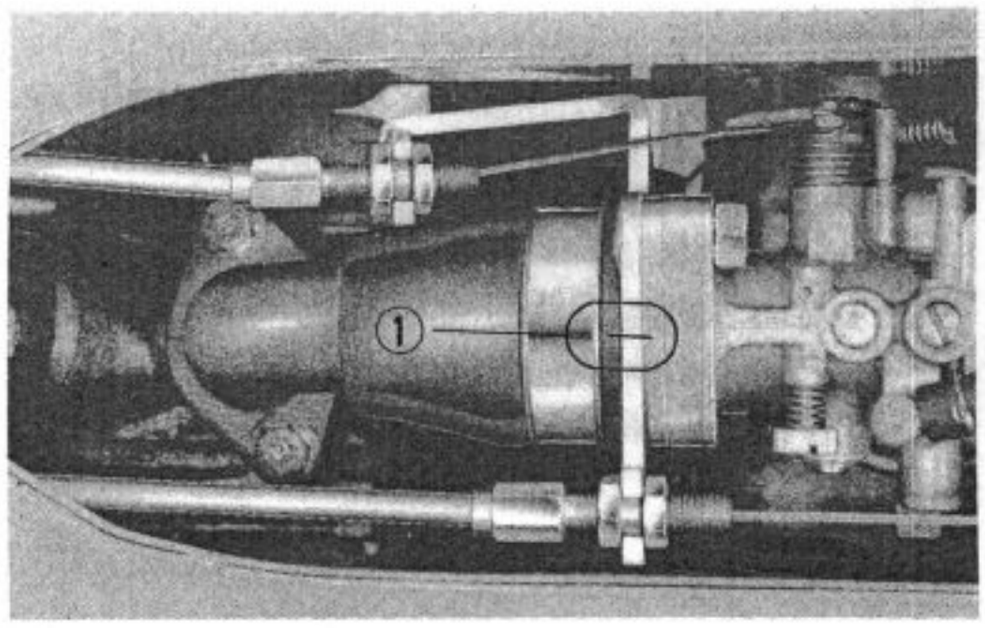

Fig. 3-54
1. Matching marks on inlet pipe and cable stay plate

Disassembly :

1. Remove the carburetor assembly.
2. Remove the hex bolt and remove the float chamber body.
3. Remove the pin set plate and remove the float arm.

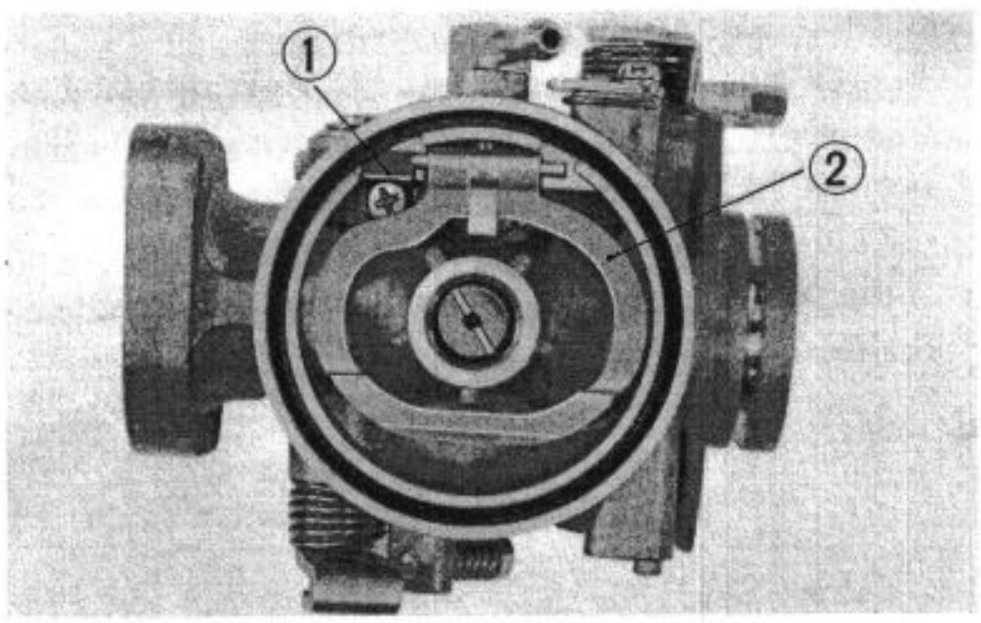

Fig. 3-55
1. Pin set plate 2. Float arm

4. Remove the float valve and then remove the valve seat.
5. Remove the main jet and remove the needle jet.

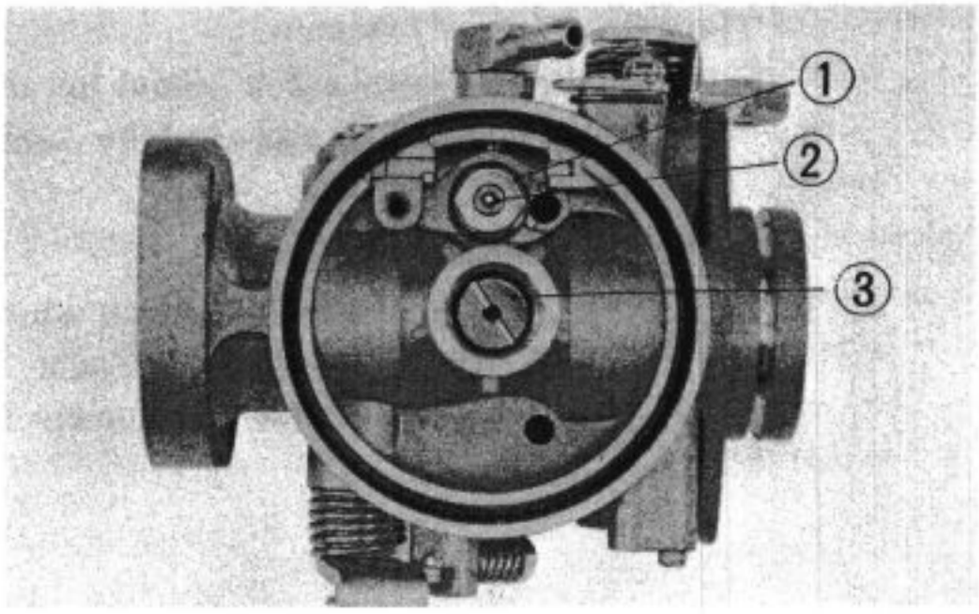

Fig. 3-56
1. Valve seat 2. Float valve 3. Main jet

Inspection :

1. Blow the main jet to check for clogging.
2. Check the float valve and its seat for proper contact.

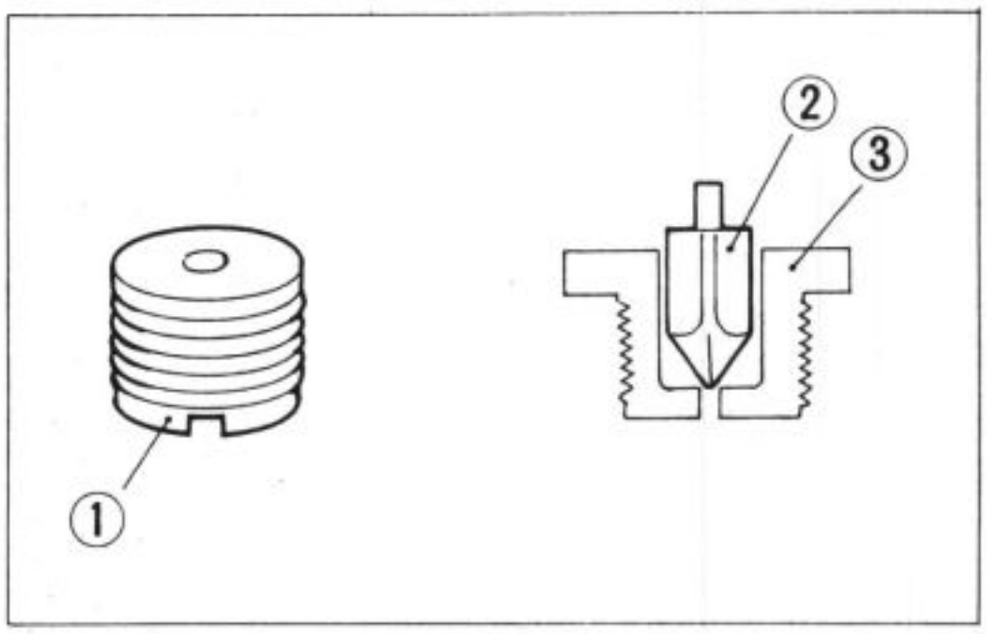

Fig. 3-57
1. Main jet 2. Valve seat 3. Float valve

Key to assembly :

1. Install the valve seat with the valve removed.
2. As shown in Fig. 3-58, install the float chamber body so that the drain screw is positioned to the right side as viewed from the front of carburetor (choke valve side) and the overflow pipe to the left side.
3. Adjust the float level.
4. Adjust the idle speed.

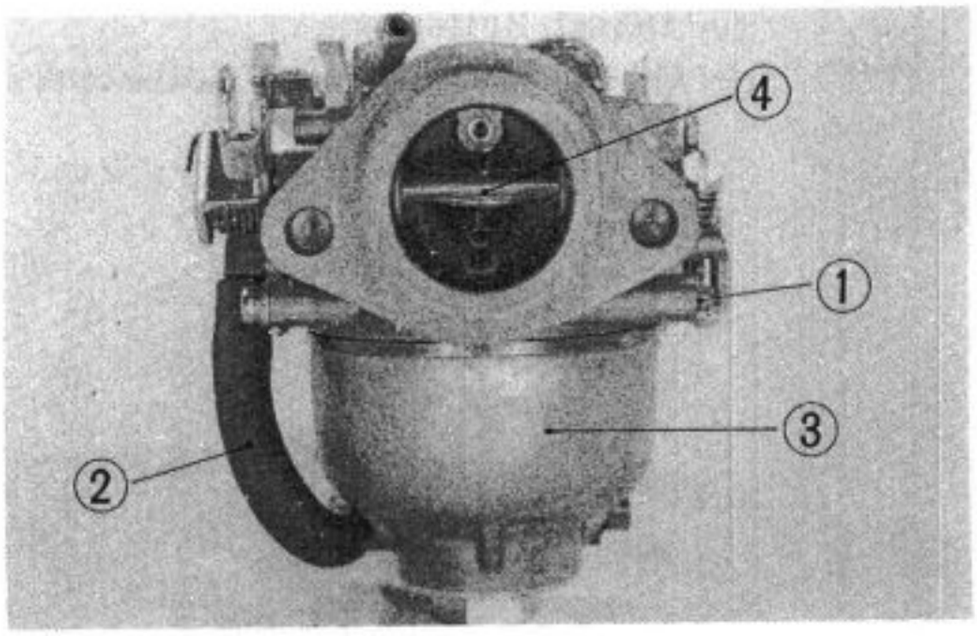

Fig. 3-58 1. Drain screw 2. Overflow pipe 3. Float chamber body 4. Choke valve

Float level adjustment :

1. Finger-move the float to left and right and find the position where the float arm starts bearing on the float valve tip. In such a position, adjust the float level so that it is the specified height (H). **H : 30.8 mm** (1.21 in.)
2. If the float level is out of specification, adjust it by bending the float arm tip carefully.

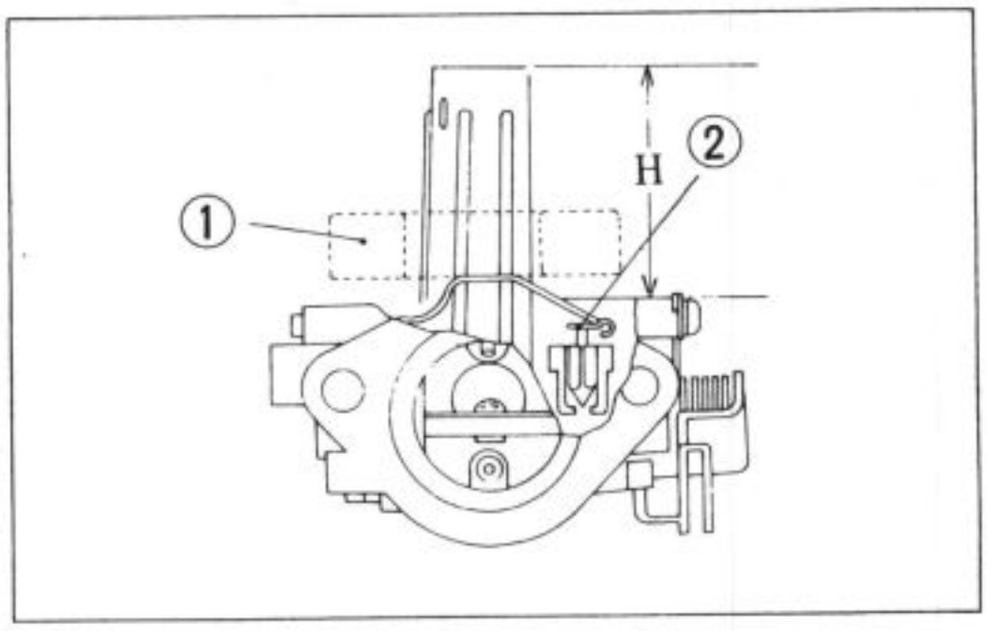

Fig. 3-59
1. Float 2. Float arm

Throttle cable adjustment :

With the throttle valve closed fully, adjust the throttle cable so that it has no slack by means of the adjusting nut.

Choke cable adjustment :

Adjust the choke cable so that when the choke button is pushed, the choke lever (cable end) bears on the stopper and the cable has no slack by means of the adjusting nut.

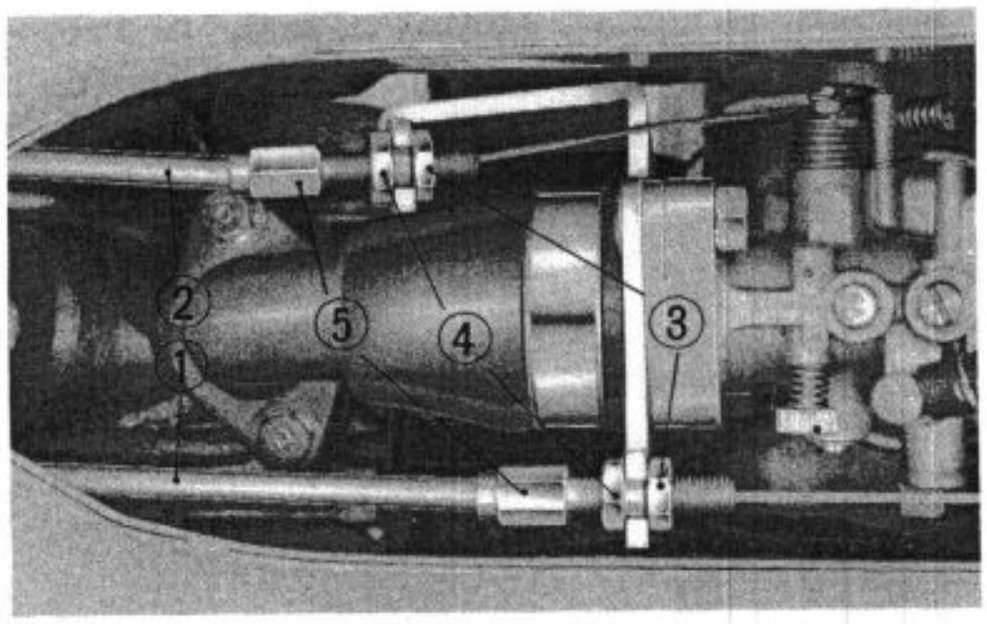

Fig. 3-60 1. Choke cable 2. Throttle cable 3. Lock nut 4. Adjusting nut 5. Adjusting bolt

Carburetor setting table

Item	CF50	CF70
Type	Piston valve	Piston valve
	275A	277A
Venturi Dia	11	11 mm
Main jet	#55	#70
Air jet	#120	#120
Air screw Opening	2±¼	2±¼

IV. FRAME

1. Front Wheel and Front Brake

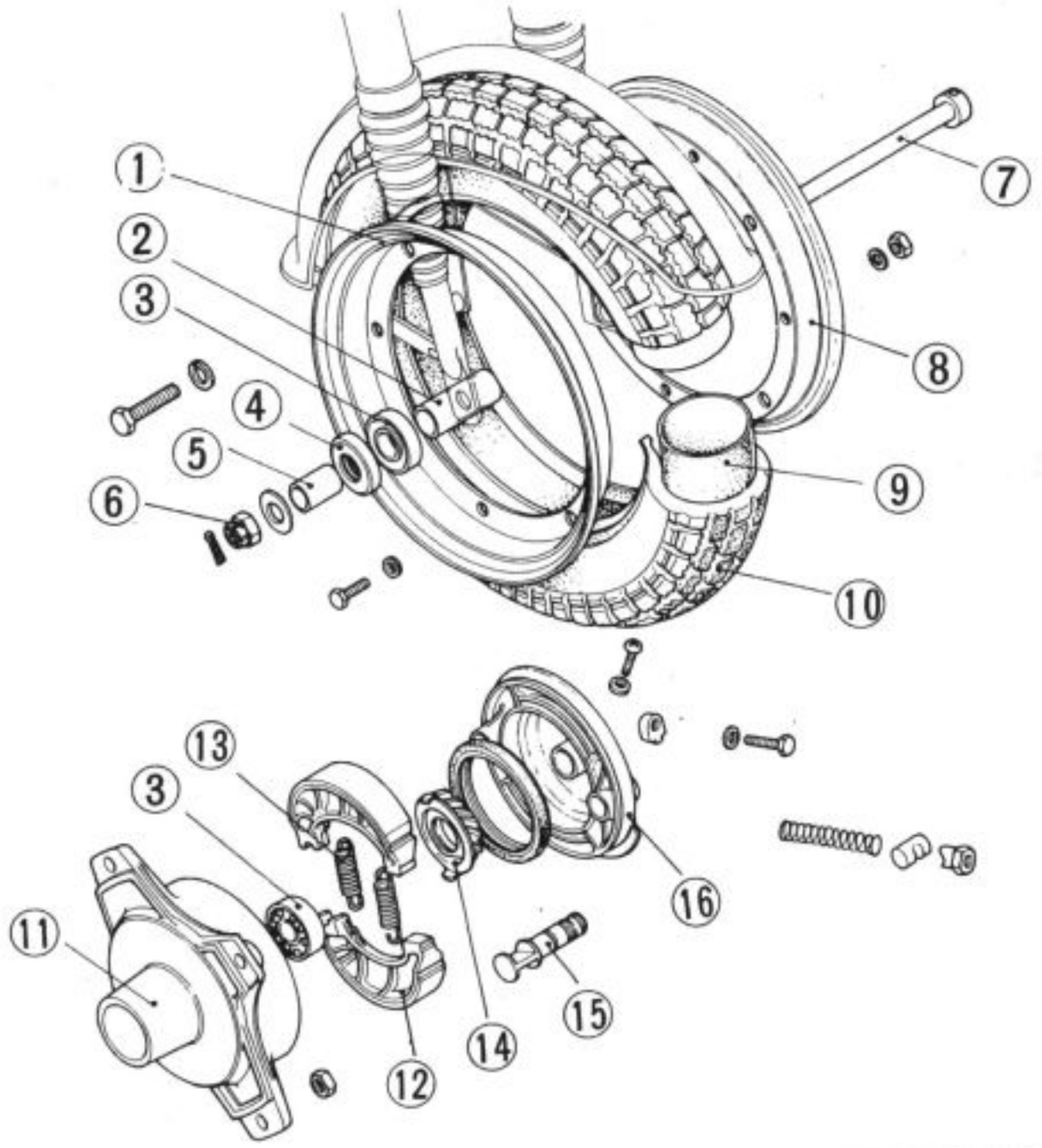

Fig. 4-1
① Right wheel rim
② Front axle distance collar
③ 6301 ball bearing
④ 21377 oil seal
⑤ Front wheel side collar
⑥ Axle nut
⑦ Front wheel axle
⑧ Left wheel rim
⑨ Wheel tube
⑩ Wheel tire
⑪ Front wheel hub
⑫ Brake shoe
⑬ Brake shoe spring
⑭ Speedometer gear
⑮ Brake shoe cam
⑯ Front brake panel

Disassembly :

1. Disconnect the front brake cable and speedometer cable.
2. Pull out the cotter pin and remove the axle nut. Then remove the front wheel.
3. Remove the oil seal and pull out the ball bearing and distance collar.
4. Remove the 8mm bolts and remove the front wheel hub.
5. Deflate the tire slightly and remove the 6mm bolts. Then separate the wheel rims from the tire.

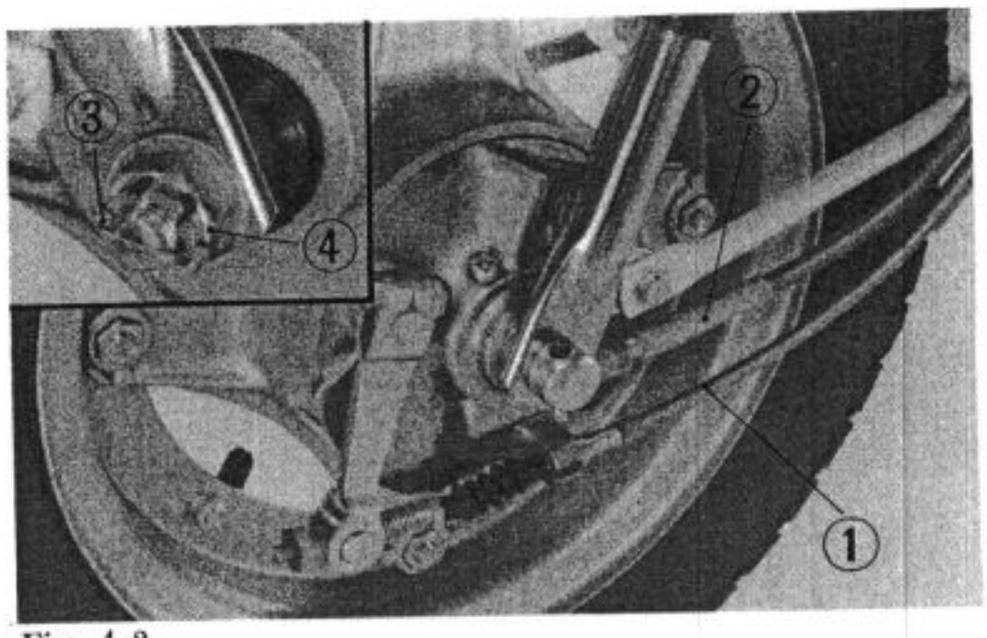

Fig. 4-2
1. Front brake cable
2. Speedometer cable
3. Cotter pin
4. Axle nut

〈 Front brake 〉

1. Remove the brake shoes and springs by expanding them.
2. Remove the brake arm and pull out the brake cam.

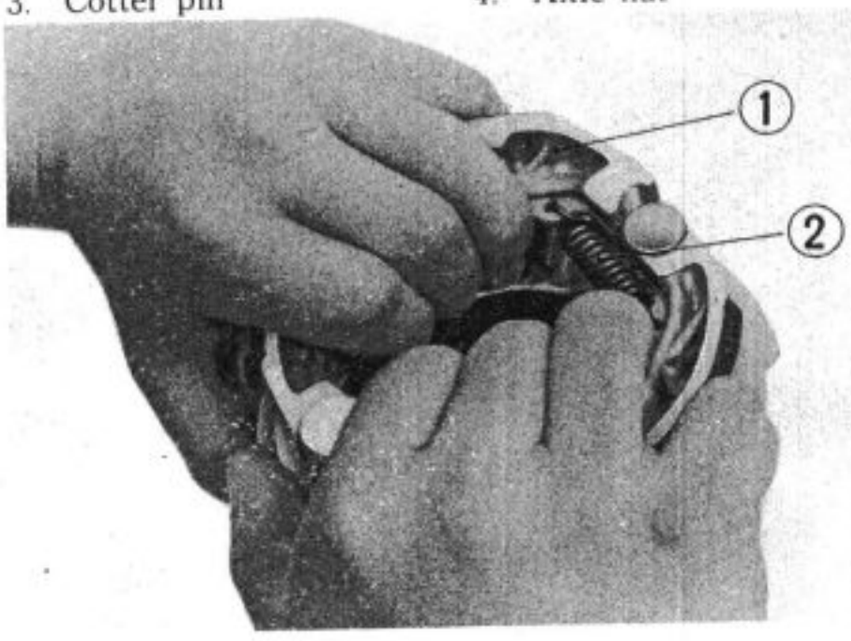

Fig. 4-3
1. Brake shoe
2. Brake shoe spring

Inspection :

1. Check the front wheel axle for bend.
2. Check the ball bearings for looseness.
3. Check the wheel rims for runout or damage.
4. Check the oil seals for damage.
5. Check the speedometer gear for wear.
6. Check to see if metal pieces or stones are bitten in the tire tread pattern or wall. Also check the tire for scores or scratches.
7. Check the tire inflation pressure.
   Specification : 1.0kg/cm² (14psi).
8. Check the tire valve for leak.
9. Measure the wheel hub-to-brake shoe clearance.
10. Measure the brake lining thickness.
11. Check the brake panel for damage.

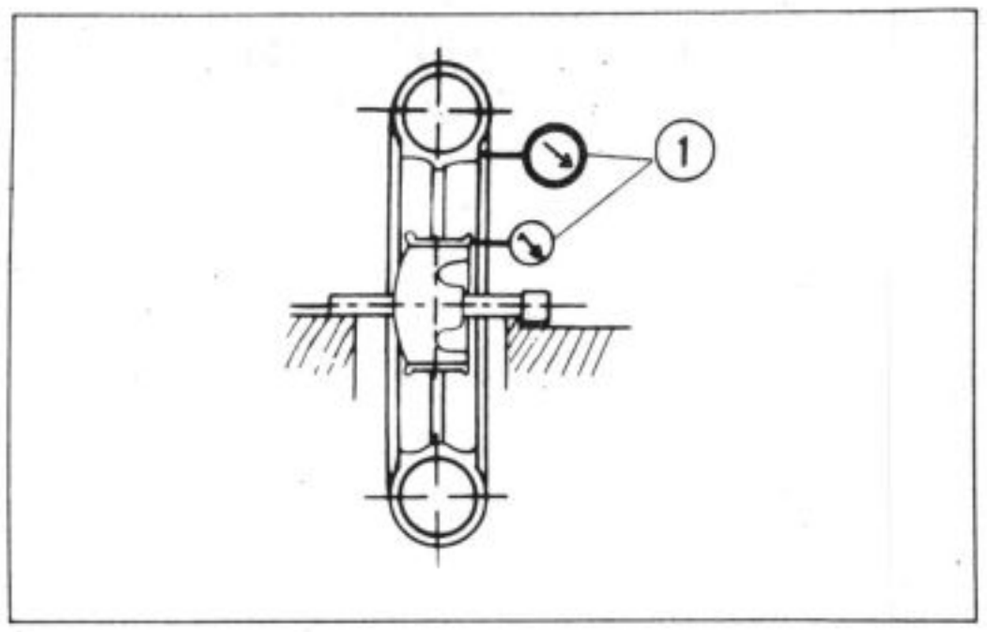

Fig. 4-4
1. Dial gauges

Assembly :

1. Slightly inflate the tube and install the tire to the wheel rims.
   a. When installing the tire, do not damage the tube.
2. Install the wheel hub to the rims as shown in Fig. 4-5.
3. Fill the void of ball bearings with grease. Apply a coat of grease to the inside of wheel hub. Put the distance collar and then ball bearings in the wheel hub.
4. Install the wheel hub to the rims with the 8mm bolts.
5. Install the brake cam to the brake panel. Then hook the brake shoe springs to the brake shoes and install them to the brake panel.
6. Install the brake arm.
7. Install the brake panel to the wheel by fitting the tab of the front cushion in the recess in the brake panel.
8. Connect the speedometer cable.
9. Connect the front brake cable and adjust the free play properly.

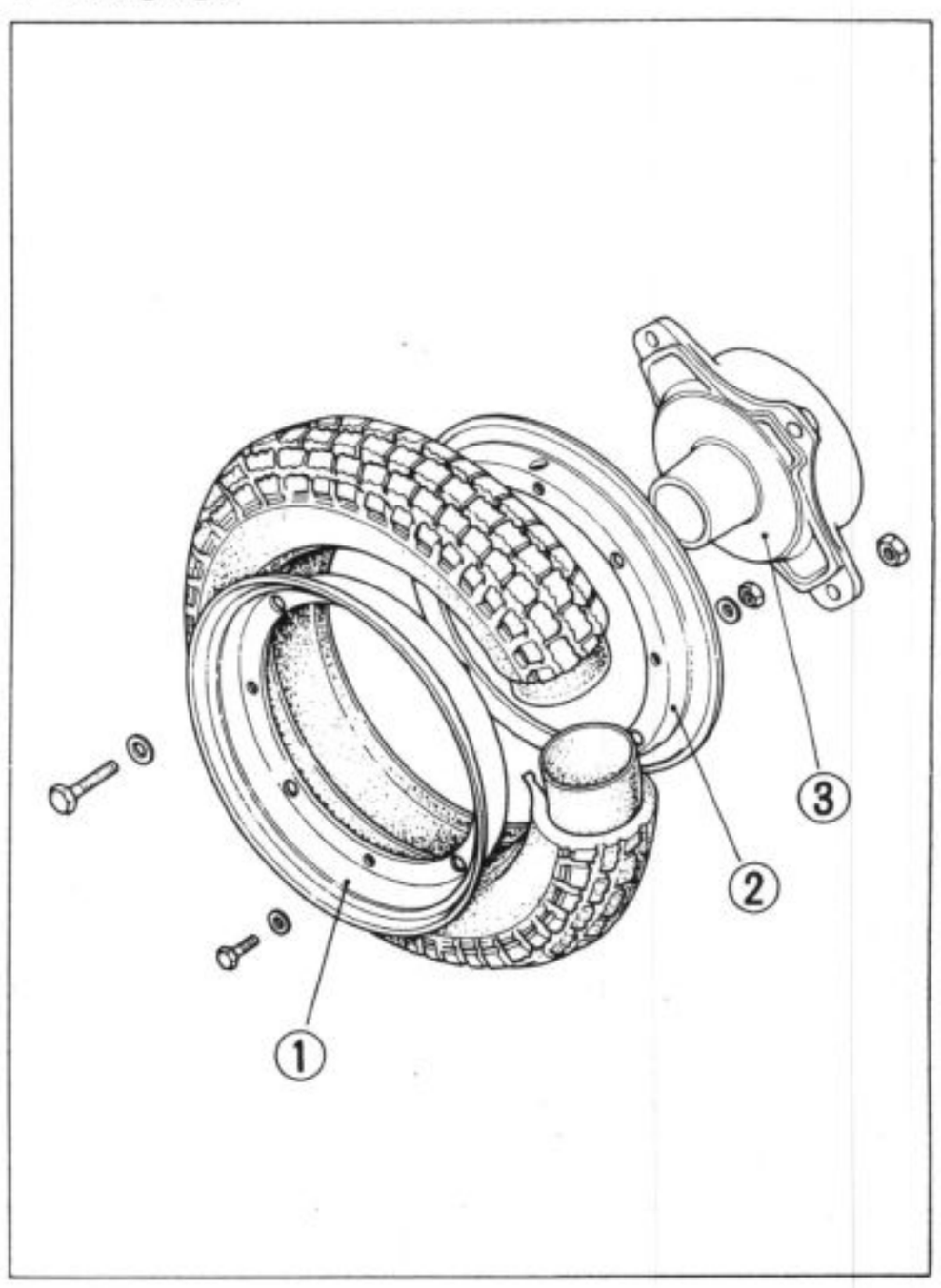

Fig. 4-5
1. Right wheel rim 2. Left wheel rim 3. Front wheel hub

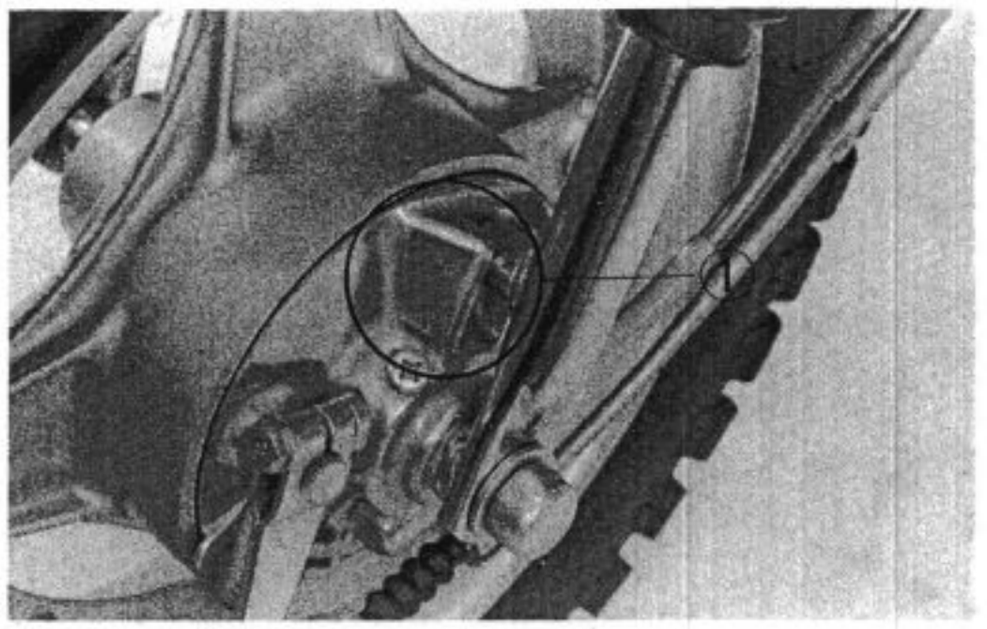

Fig. 4-6
1. Recess in brake panel and tab of front cushion

2. Rear Wheel and Rear Brake

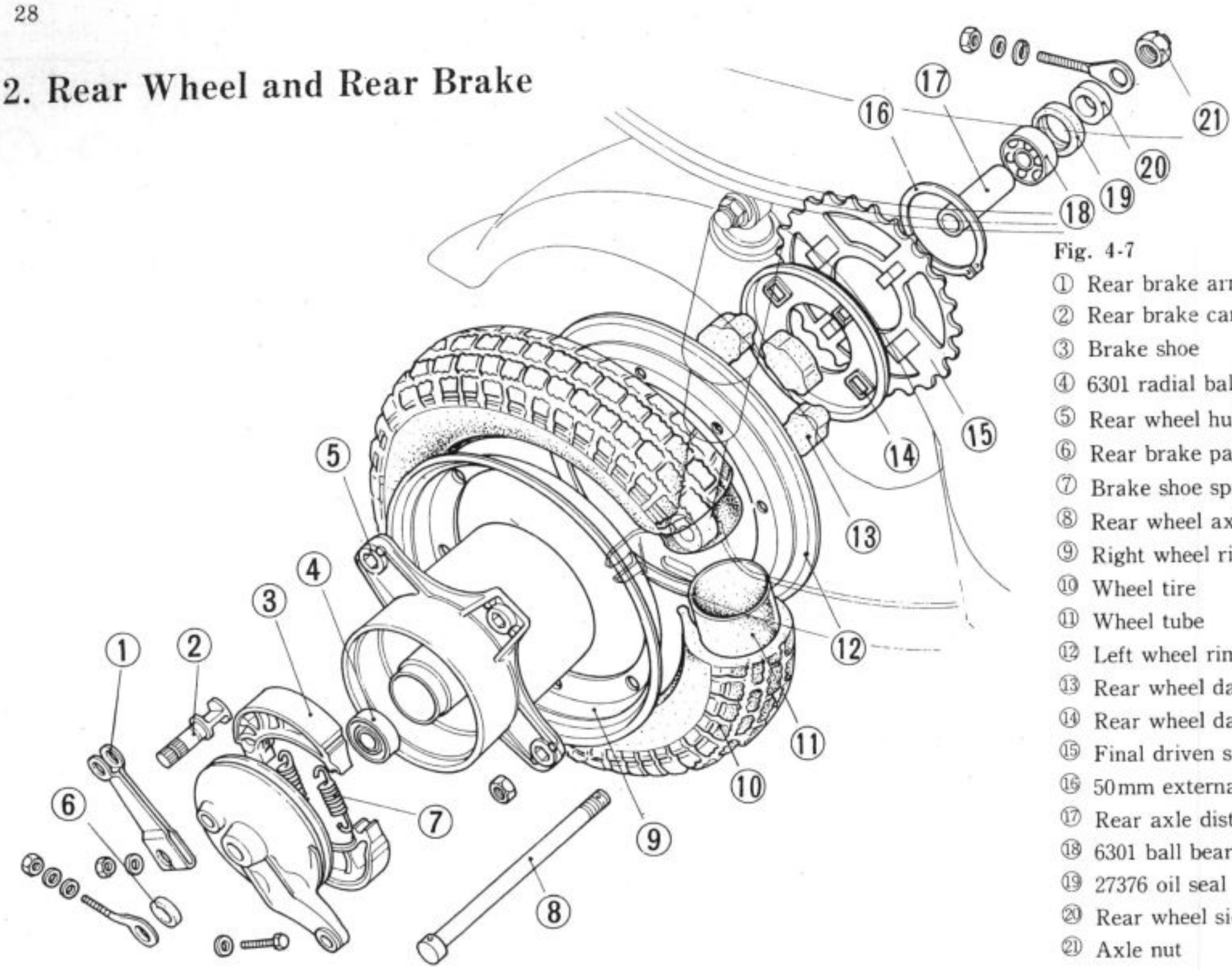

Fig. 4-7

① Rear brake arm
② Rear brake cam
③ Brake shoe
④ 6301 radial ball bearing
⑤ Rear wheel hub
⑥ Rear brake panel side collar
⑦ Brake shoe spring
⑧ Rear wheel axle
⑨ Right wheel rim
⑩ Wheel tire
⑪ Wheel tube
⑫ Left wheel rim
⑬ Rear wheel damper
⑭ Rear wheel damper cover
⑮ Final driven sprocket
⑯ 50mm external snap ring
⑰ Rear axle distance collar
⑱ 6301 ball bearing
⑲ 27376 oil seal
⑳ Rear wheel side collar
㉑ Axle nut

Disassembly :

1. Pull out the cotter pin and loosen the axle nut and drive chain adjuster nuts.
2. Disconnect the brake cable from the brake rod.
3. Separate the rear brake torque link from the brake panel.
4. Remove the drive chain joint and remove the drive chain.
5. Remove the axle nut and remove the rear wheel.
6. Remove the rear brake panel and wheel rims as in the front wheel.
7. Remove the 50mm external snap ring and remove the driven sprocket.

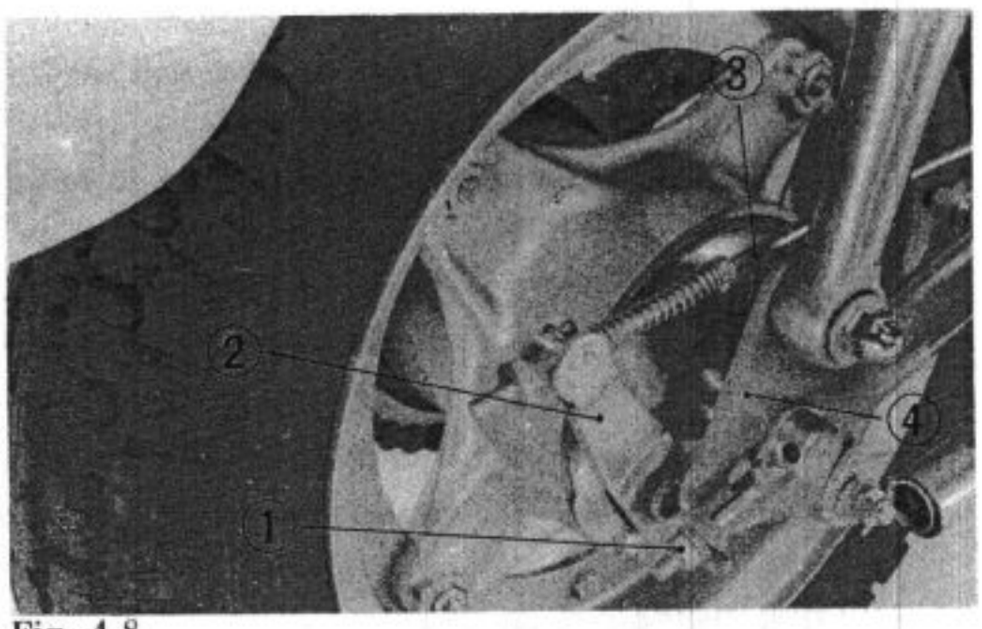

Fig. 4-8

1. Drive chain adjuster nut
2. Brake arm
3. Brake rod
4. Rear brake torque link

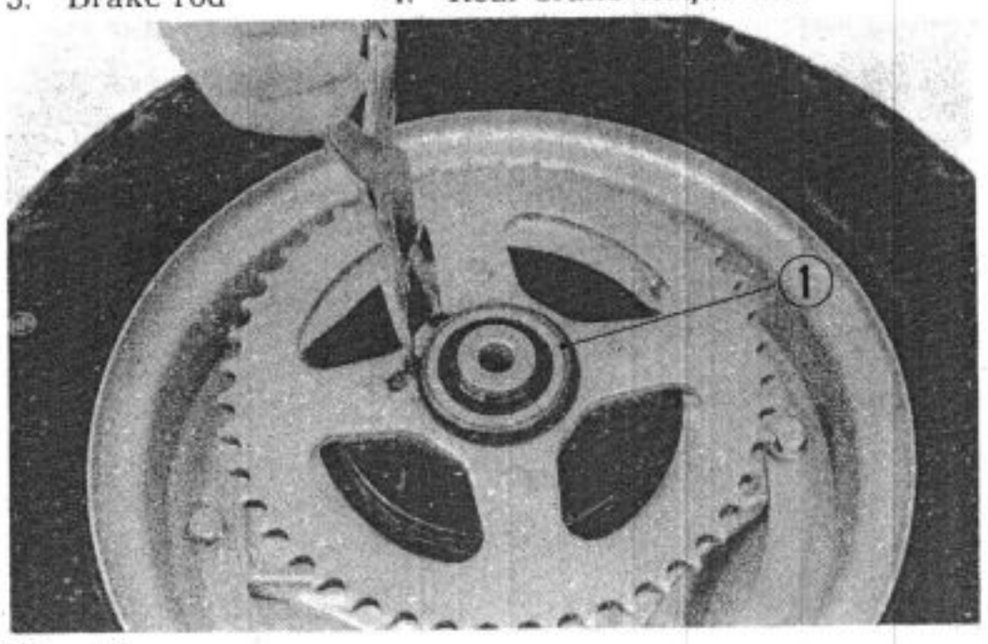

Fig. 4-9

1. 50mm external snap ring
2. Driven sprocket

Inspecition :

1. Check the rear axle for bend.
2. Check the ball bearings for looseness.
3. Check the wheel rims for runout or damage.
4. Measure the brake drum-to-lining clearance.
5. Measure the brake lining thickness.
6. Check the brake panel for damage.
7. Check the oil seal for damage.
8. Check the tire inflation pressure.
   Specification : 1.2kg/cm² (17psi).
9. Check to see if metal pieces or stones are bitten in the tire tread pattern or wall. Also check the tire for scores or scratches.
10. Check the tire valve for leak.
11. Check the final driven sprocket for wear.

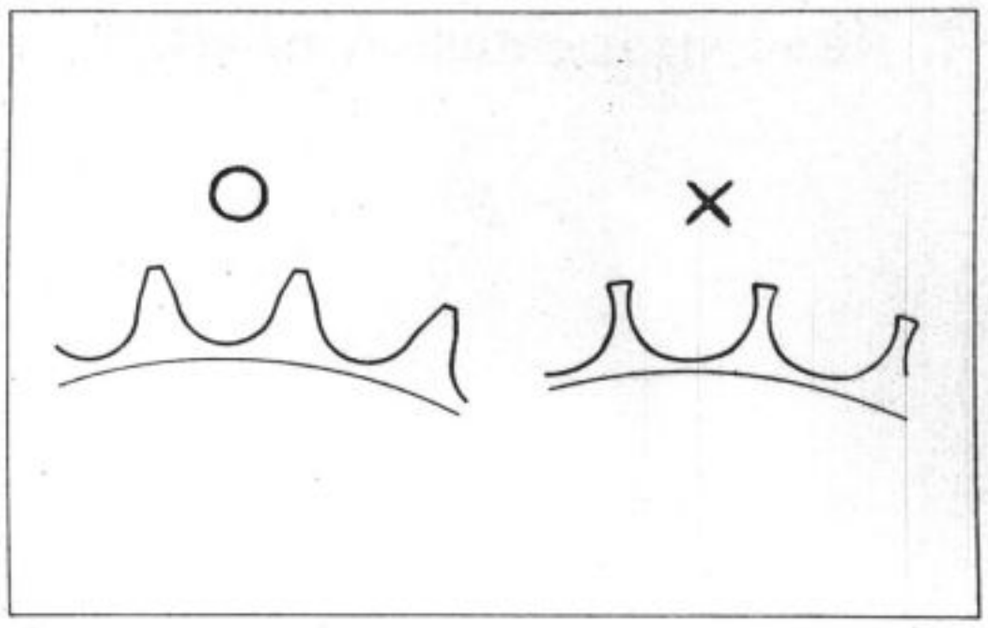

Fig. 4-10
1. Checking the final driven sprocket for wear

Assembly :

1. Install the tire to the wheel rims.
2. Fill the void of ball bearings with grease. Apply a coat of grease to the inside of wheel hub. Put the distance collar and then the ball bearings in the wheel hub.
3. Install the wheel hub to the rims.
4. Install the final driven sprocket.
5. Install the rear wheel.
   a. Install the rear wheel axle from the right side.
6. Connect the drive chain and adjust the chain tension properly. Then tighten the axle nut.

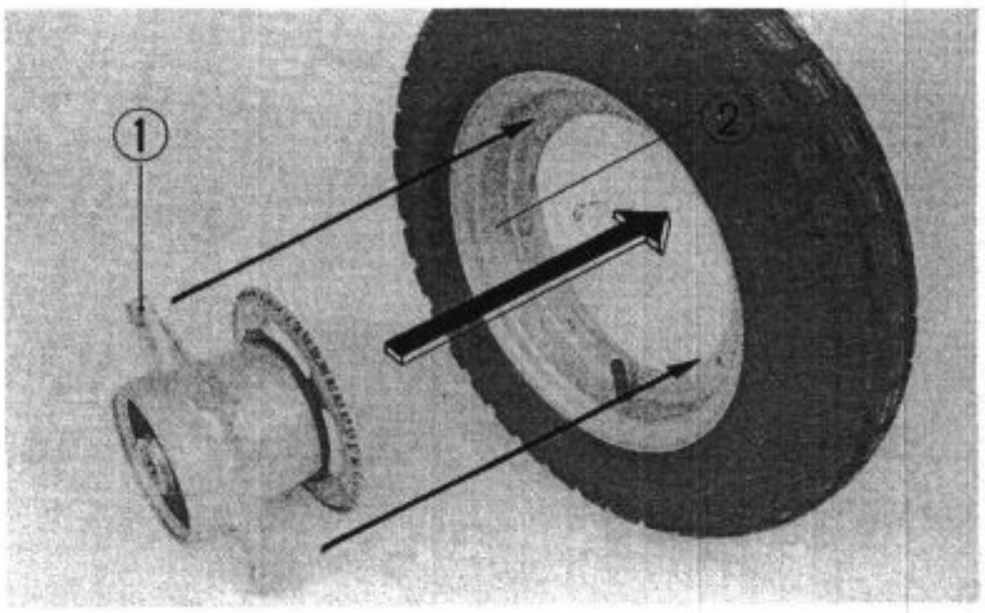

Fig. 4-11
1. Wheel hub 2. Right wheel rim

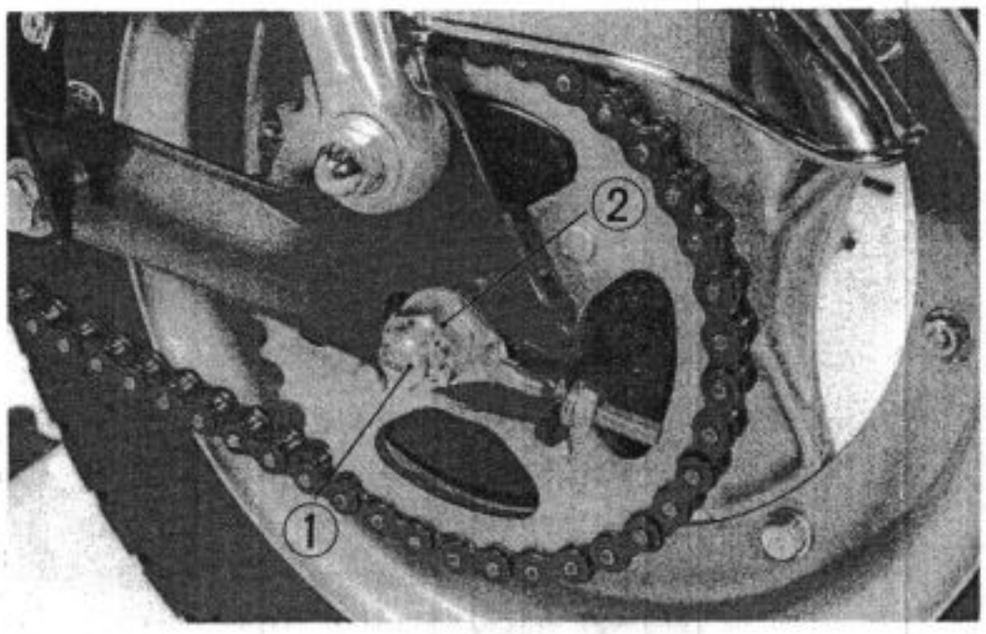

Fig. 4-12
1. Rear wheel axle 2. Axle nut

3. Handlebar, Front Fork and Front Shock Absorber

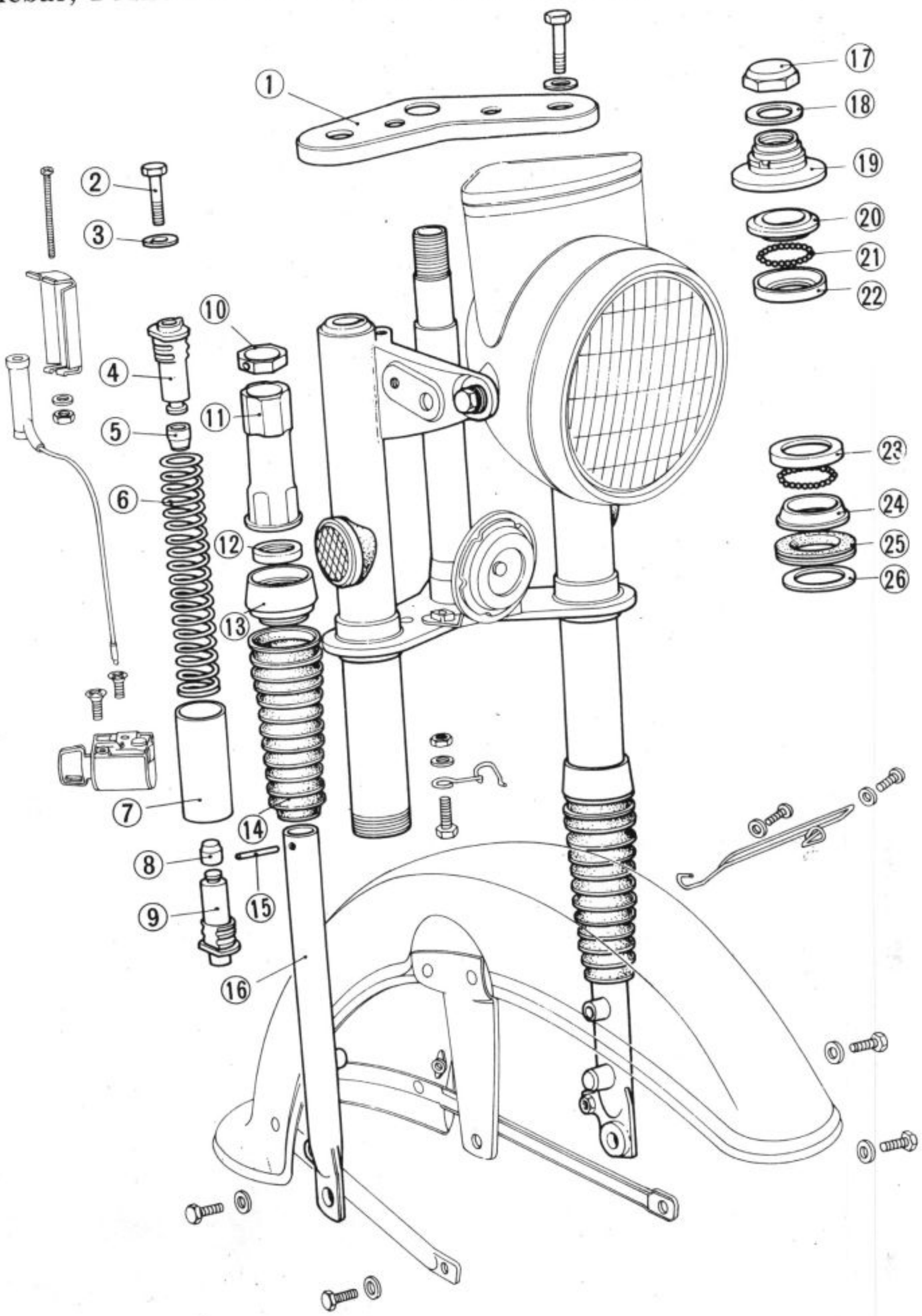

Fig. 4-13

① Fork top bridge plate
② Front fork bolt
③ 10.3mm washer
④ Shock absorber spring upper holder
⑤ Front shock absorber stopper rubber
⑥ Front shock absorber spring
⑦ Front shock absorber spring cover
⑧ Front shock absorber stopper rubber
⑨ Shock absorber sping lower holder
⑩ Slide pipe piston
⑪ Fork guide cap
⑫ Oil seal
⑬ Fork pipe guide cap
⑭ Front fork boot
⑮ Spring pin
⑯ Fork slide pipe
⑰ Steering stem nut
⑱ Steering stem nut washer
⑲ Steering head top thread
⑳ Steering top cone race
㉑ # 6 steel balls
㉒ Steering bottom cone race
㉓ Steering top ball race
㉔ Steering bottom cone race
㉕ Steering head dust seal
㉖ Steering head dust seal washer

Disassembly :

1. Disconnect the brake cable and throttle cable at their ends.
2. Remove the headlight assembly and disconnect the turn signal/horn switch leads and dimmer switch leads.
3. Remove the upper holders and remove the choke cable stay and handlebar pipe.
4. Remove the front wheel and front fender.
5. Remove the front shock absorber bolt. Then loosen the fork guide cap with the 37mm front shock absorber wrench (Tool No. 07902-0980000) and remove the front shock absorber assembly.
6. Remove the fork top bridge.
7. Remove the headlight case.
8. Remove the steering top thread and remove the front fork.

NOTE:

Do not lose the #6 steel balls.

9. Remove the turn signal assemblies, horn assembly and handlebar lock.

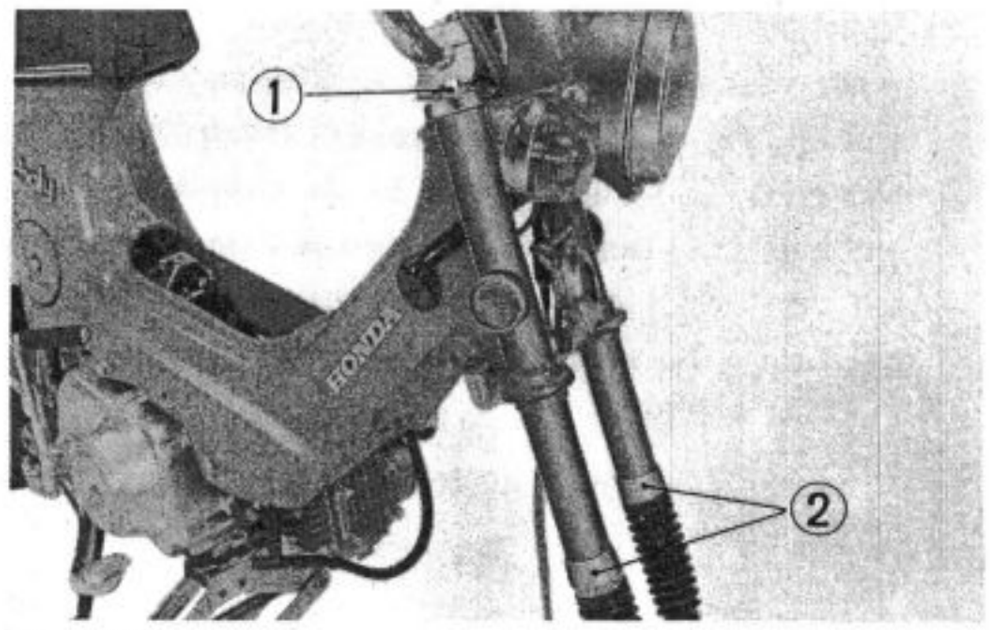

Fig. 4-14
1. Fork bolt
2. Fork guide caps

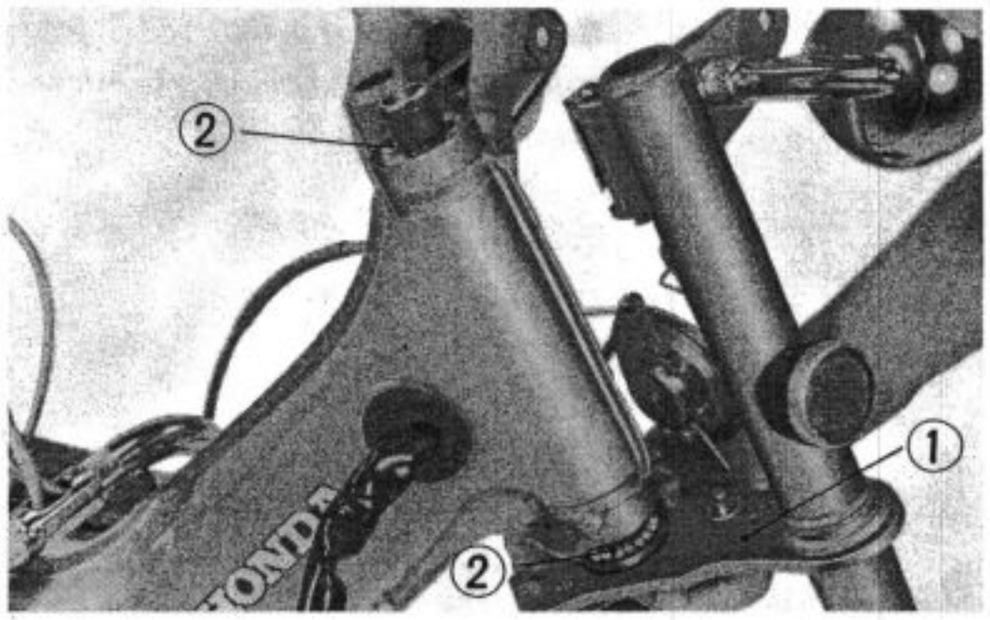

Fig. 4-15
1. Front fork
2. # 6 steel balls

Front shock absorber assemblies

1. Pull out the shock absorber pin with the front shock absorber pin remover (Tool No.07944-0980000). Now the front shock absorber assembly can be disassembled in the states A and B in Fig. 4-17.

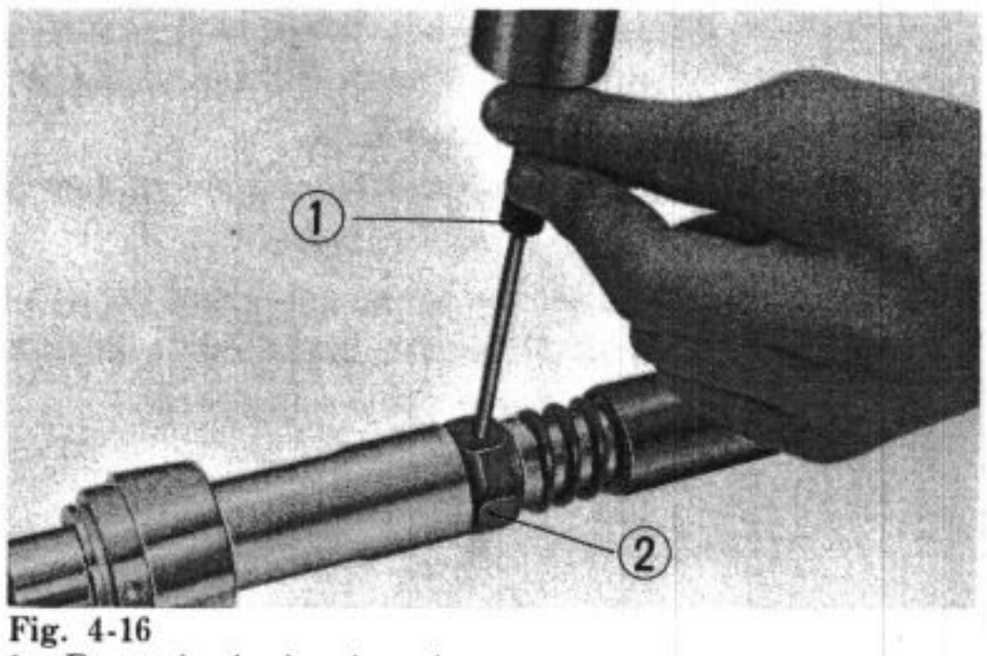

Fig. 4-16
1. Front shock absorber pin remover
2. Slide pipe piston

Inspection :

1. Check the cables for breakage or proper operation.
2. Check the handlebar holders for breakage.
3. Check the handlebar levers for breakage.
4. Check the front shock absorber springs for tension.
5. Check the front shock absorber stopper rubbers for breakage or any other damage.
6. Check the steel balls for damage or wear.
7. Check the steel ball contact surfaces of the cone races and ball races for scores, scratches or wear.

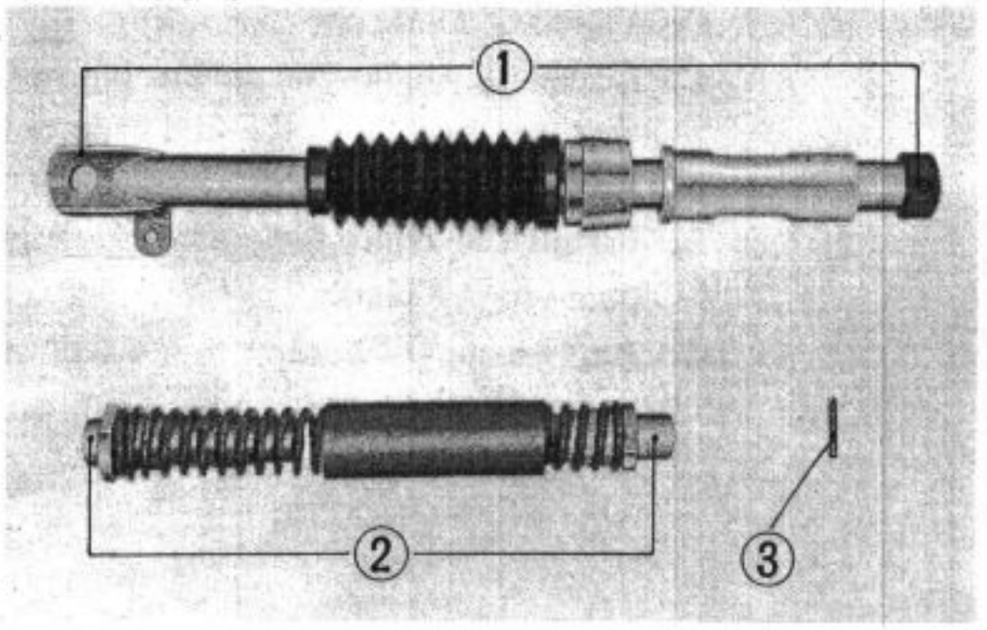

Fig. 4-17
1. State A
2. State B
3. Shock absorber pin

Assembly :

1. Wash clean the cone races, ball races and #6 steel balls and apply a coat of fresh grease to them.
2. Put each 21 #6 steel balls in the steering top ball races and fully tighten the steering top thread. Then back off the top thread ⅓ turn and check to see if the handlebar can be moved with reasonable ease.

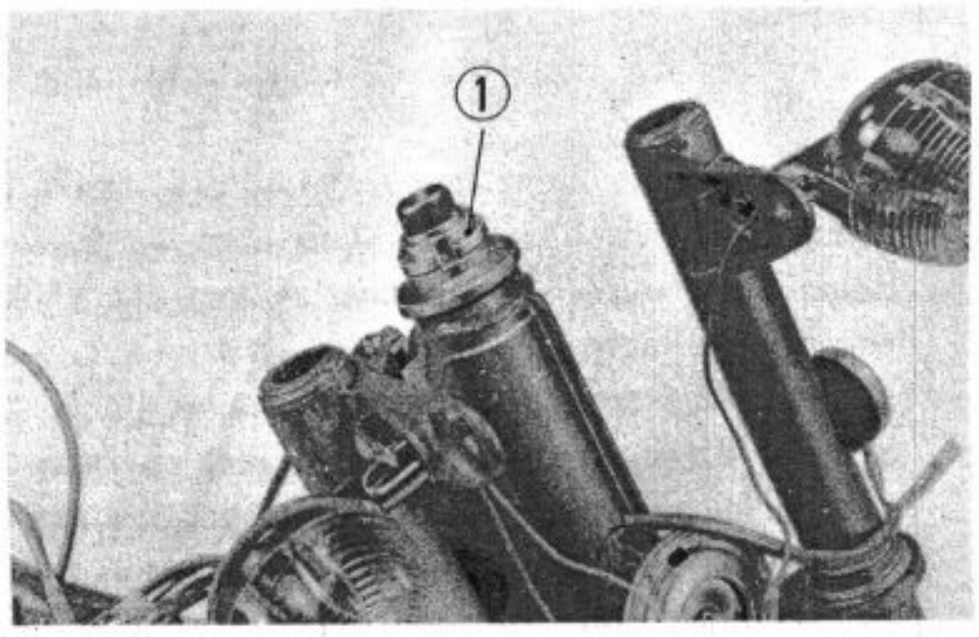

Fig. 4-18
1. Steering top thread

3. Temporarily install the fork top bridge.
4. Properly install the front shock absorber assembly as shown in Fig. 4-19.

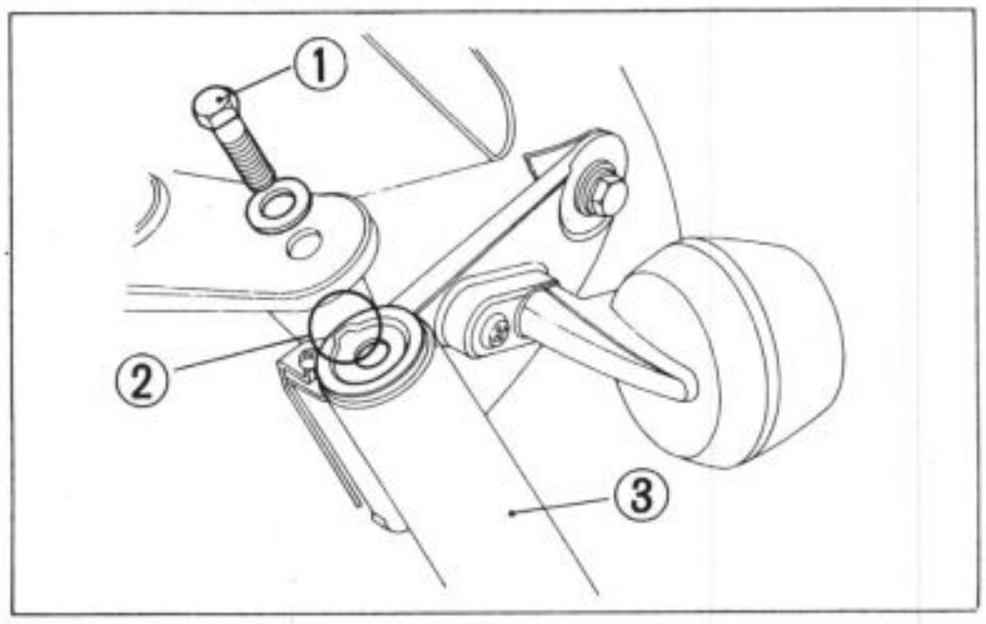

Fig. 4-19 1. Front fork bolt
2. Matching part 3. Front fork

5. Install the handlebar pipe with the punch marks on the pipe in line with the top of the lower holders. Tighten the front bolts first.
   a. Tighten the front side of the pipe together with the choke cable stay.
6. Adjust the brake cable and throttle cable. (See pages 5 and 6 for the brake cable adjustment and page 24 for the throttle cable adjustment.)

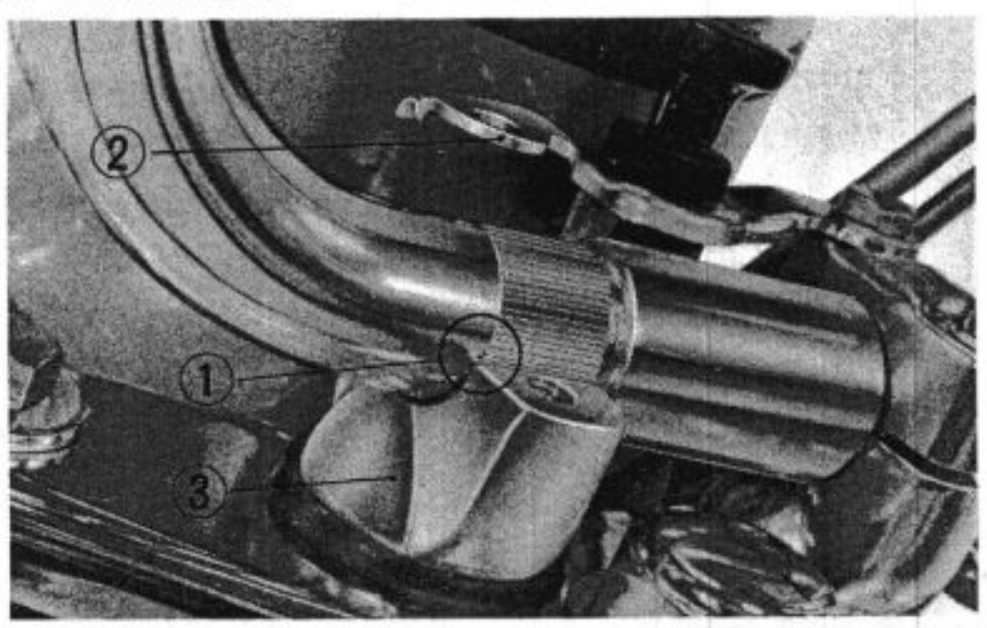

Fig. 4-20 1. Punch mark
2. Choke cable stay 3. Handlebar pipe lower holder

Front shock absorber assemblies

1. Completely drive the spring pin in the slide pipe piston so that it is flush with the end face of the piston.

NOTES :

1. Install the front fork boot, fork guide cap and fork pipe guide to the piston first.
2. Apply a coat of grease to the front shock absorber spring and to the fork guide cap.

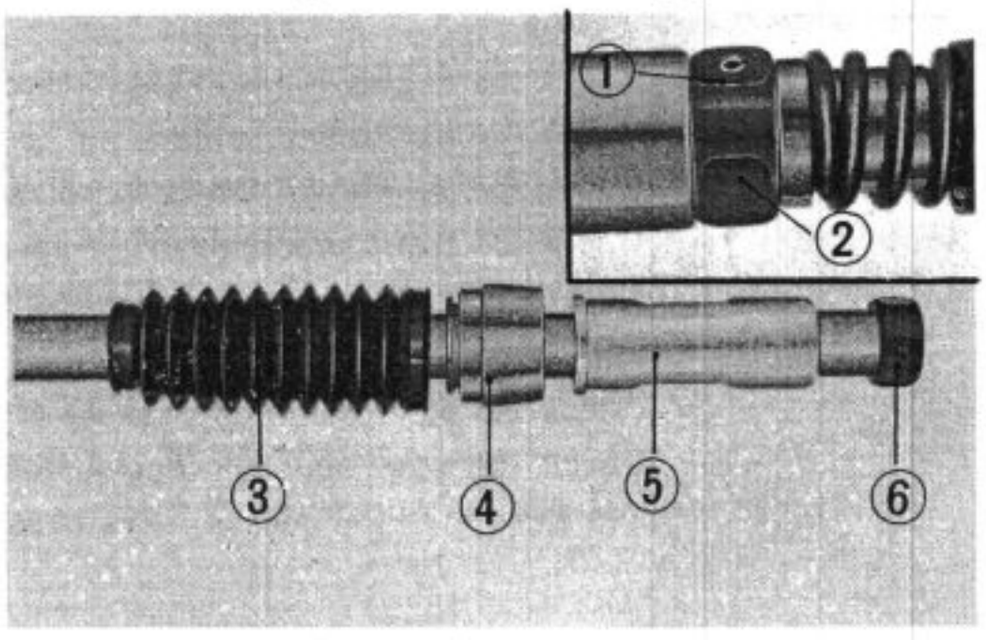

Fig. 4-21 1. Spring pin
2. Slide pipe piston 3. Front fork boot
4. Fork guide cap 5. Fork pipe guide
6. Slide pipe piston

4. Rear Suspension

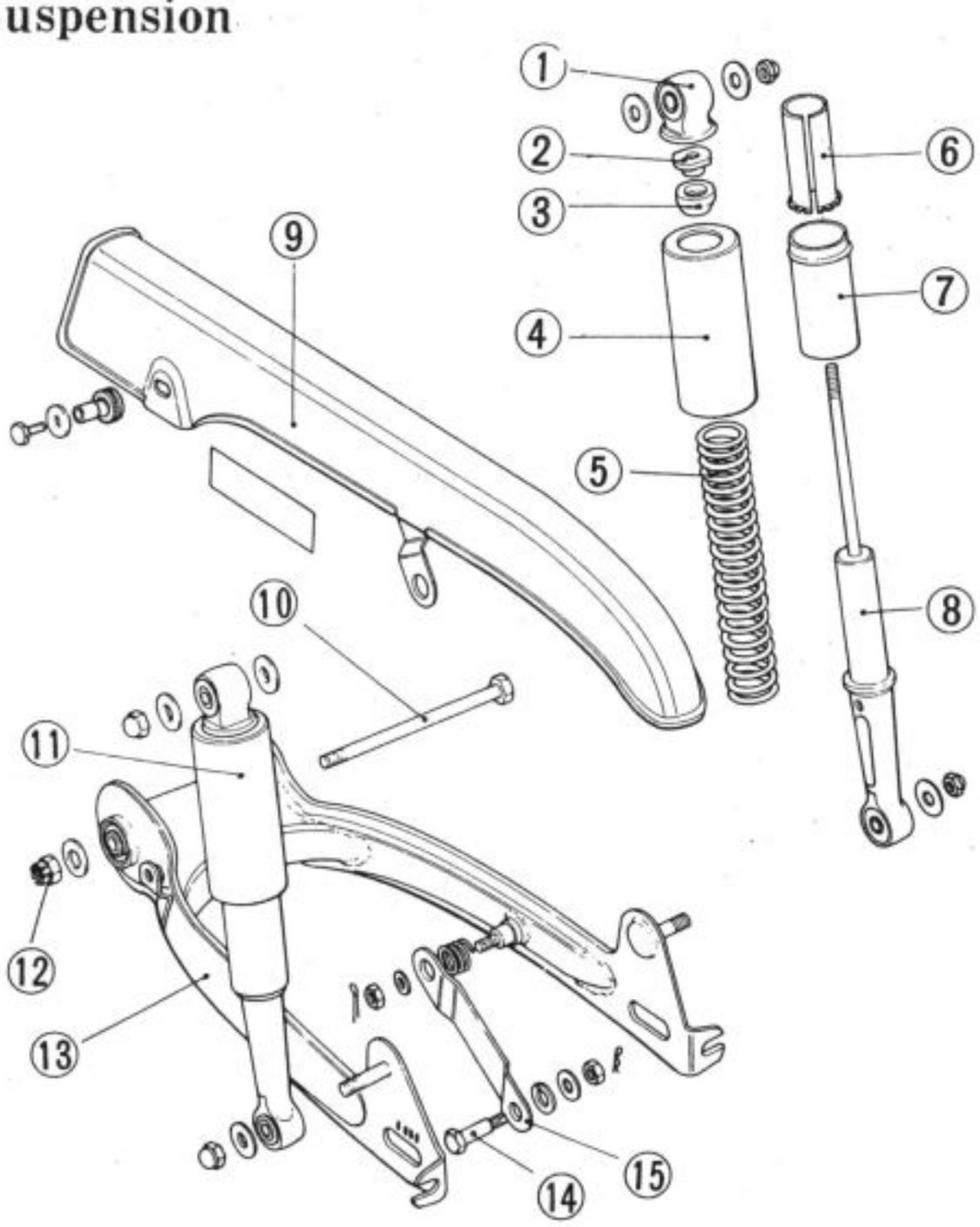

Fig. 4-22
① Rear shock absorber upper metal
② Locking nut
③ Rear shock absorber stopper rubber
④ Rear shock absorber upper case
⑤ Rear shock absorber spring
⑥ Rear shock absorber spring guide
⑦ Rear shock absorber bottom case
⑧ Rear damper
⑨ Drive chain case
⑩ Rear fork pivot bolt
⑪ Left rear shock absorber assembly
⑫ 10mm self-lock nut
⑬ Rear fork
⑭ Rear brake torque bolt
⑮ Rear brake torque link

Disassembly:

1. Remove the subcarrier.
2. Remove the rear shock absorber assemblies.
3. Disassemble the rear shock absorber assembly. Using the rear shock absorber compressor (Tool No. 07959-3290000), compress the shock absorber assembly. Then loosen the locking nut and remove the upper metal.

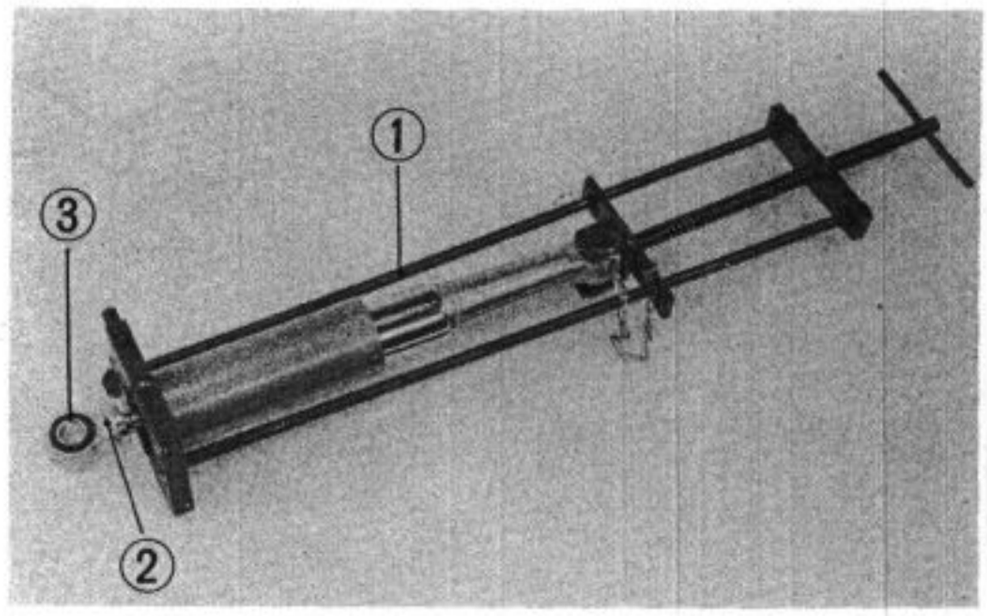

Fig. 4-23 1. Rear shock absorber compressor
2. Locking nut 3. Upper metal

4. Remove the chain case.
5. Remove the rear wheel. (See page 28.)
6. Disconnect the rear brake cable.
7. Pull out the pivot bolt and remove the rear fork.
8. Remove the rear brake torque link.

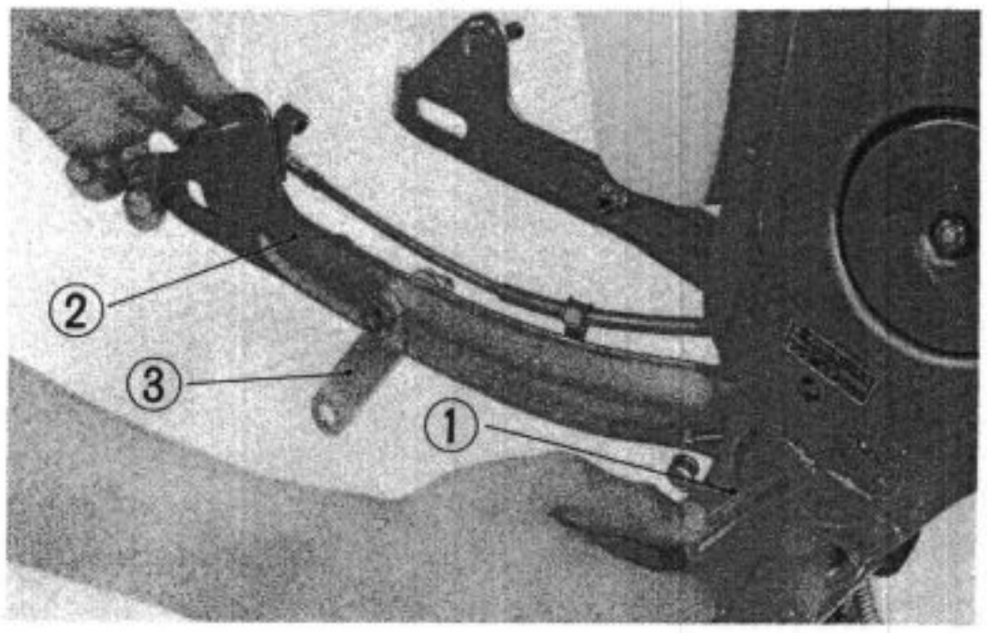

Fig. 4-24 1. Pivot bolt
2. Rear fork 3. Rear brake torque link

Inspection:

1. Check the rubber bushings for damage.
2. Check the rear shock absorber springs for damage or tension.
3. Check the rear shock absorber assembly for leak.

Key to assembly:

1. Install the rear shock absorber assembly with the side having the recess facing the inside.
2. Install the rear fork pivot bolt from the right side.

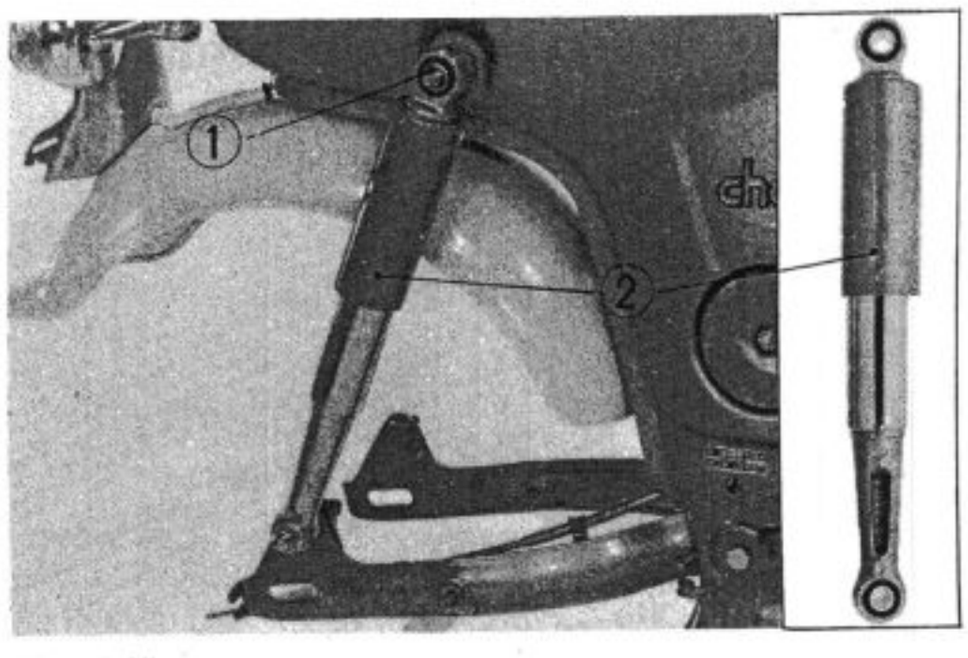

Fig. 4-25
1. Rubber bushing
2. Rear shock absorber assembly

5. Frame Body and Other Equipments

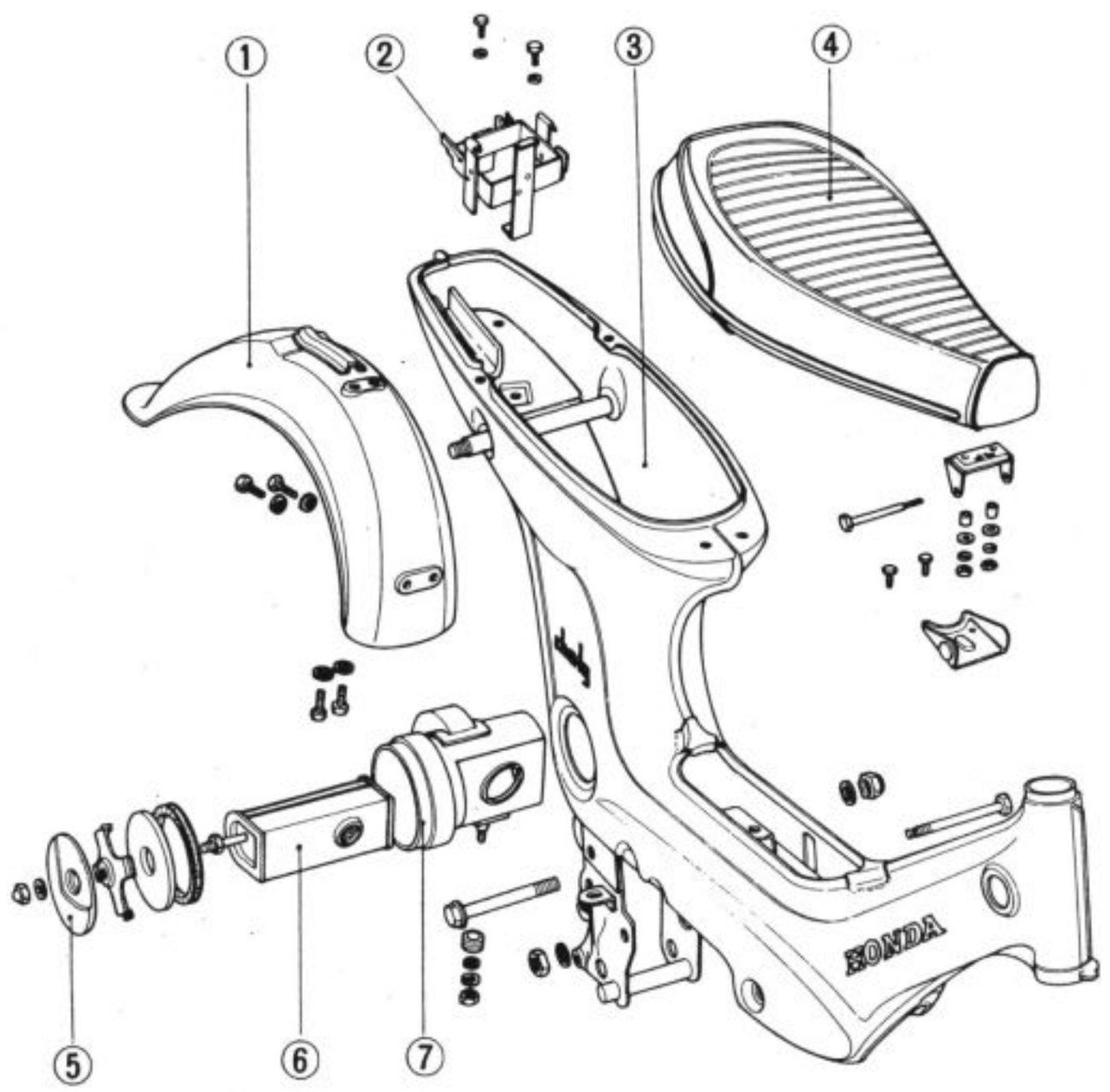

Fig. 4-26
① Rear fender
② Battery box
③ Frame body
④ Seat
⑤ Air cleaner cover
⑥ Air cleaner element
⑦ Air cleaner box

Disassembly:

1. Remove the engine.
2. Remove the carburetor.
3. Remove the rear shock absorber assemblies and rear fork. (See page 33.)
4. Remove the battery and remove the battery box.
5. Remove the seat.
   a. With the fuel cock lever in the "STOP" position, remove the lever.
   b. Remove the battery retaining plate.
7. Remove the air cleaner cover and element.
8. Remove the air cleaner case.
9. Remove the rear fender and number plate bracket.

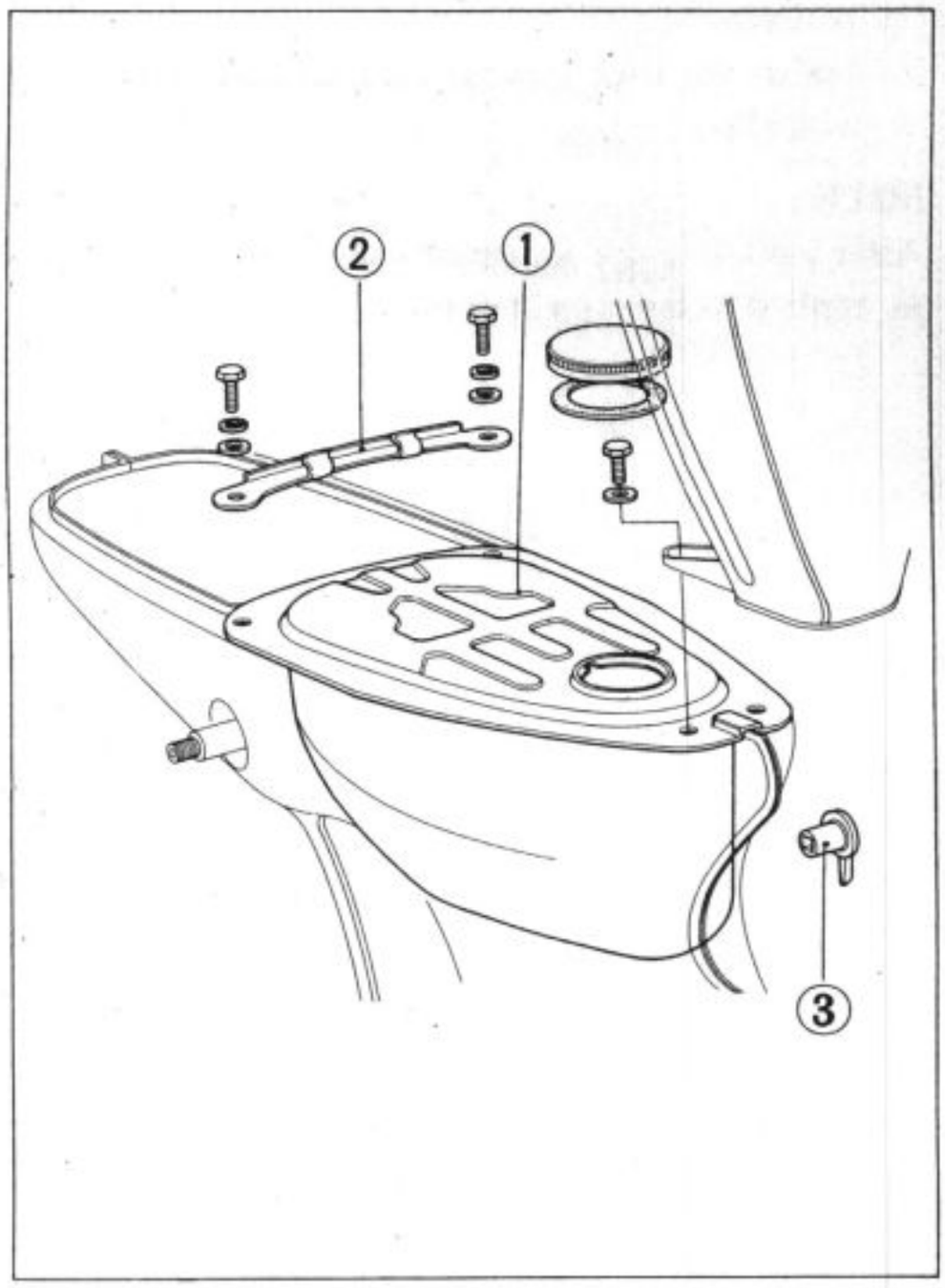

Fig. 4-27 1. Fuel tank
2. Battery cover retaining plate 3. Fuel cock lever

Inspection:

1. Check the frame for bend, deformation, cracks or any other damage.
2. Check the wire harness, connection and couplers for proper contact, scores, scratches or breakage.
3. Check the fuel filler cap hole for clogging.
4. Check the fuel cock gasket and strainer cup gasket for fatigue or damage.
5. Check the fuel tubes for deterioration or breakage.
6. Check the air cleaner element for clogging.

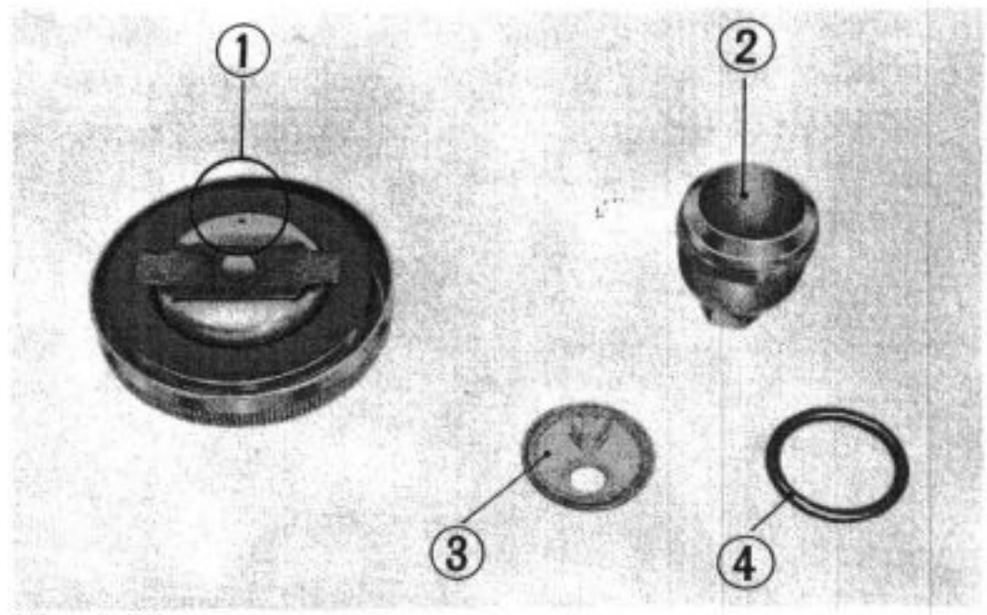

Fig. 4-28
1. Fuel filler cap hole 2. Fuel strainer cup
3. Strainer screen 4. Strainer gasket

Key to assembly:

Battery and battery box

1. Tighten the wire harness ground cord with the front battery box tightening bolt.
2. Route the battery overflow tube correctly.

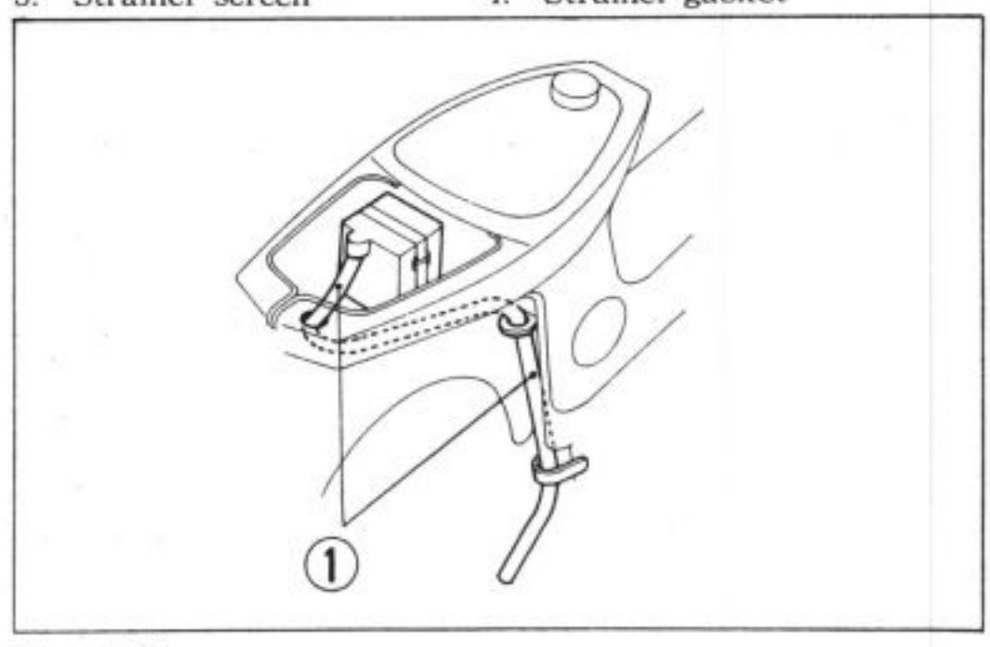

Fig. 4-29
1. Battery overflow tube

Wire harness

1. Locate the wire harness with the tape mark and secure it with clips.

NOTE:
After installing the handlebar, check to see if abnormal load is applied to the wire harness.

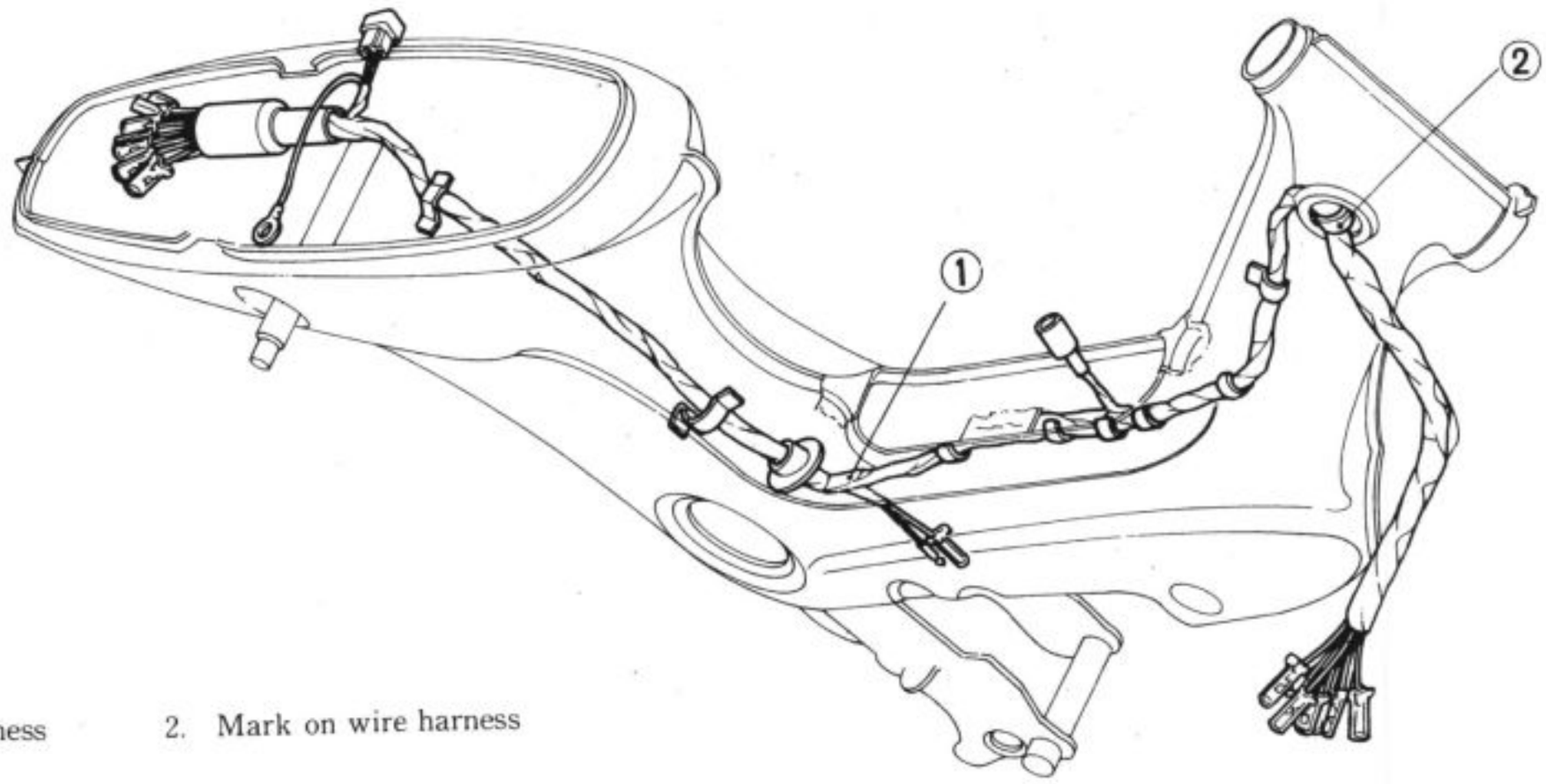

Fig. 4-30
1. Wire harness 2. Mark on wire harness

Ignition coil

1. Position the ignition coil assembly as shown in Fig. 4-32.
2. Install the ignition coil assembly to the frame by fitting the tab of the ignition coil in the recess in the frame.

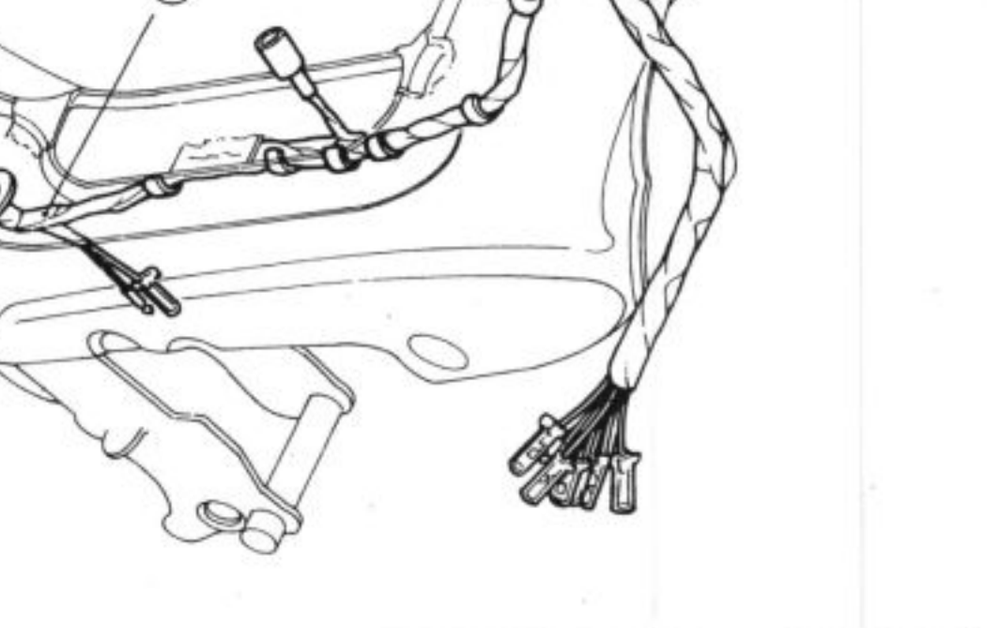

Fig. 4-31 1. Punch mark on fuel cock lever
2. Cock lever 3. O-ring 4. Fuel cock body

Fuel tank and fuel cock

1. Install the fuel cock lever so that the punch mark on the lever faces upward.
2. Install the fuel cock O-ring (23 ×2mm) to the fuel cock body with adhesive.

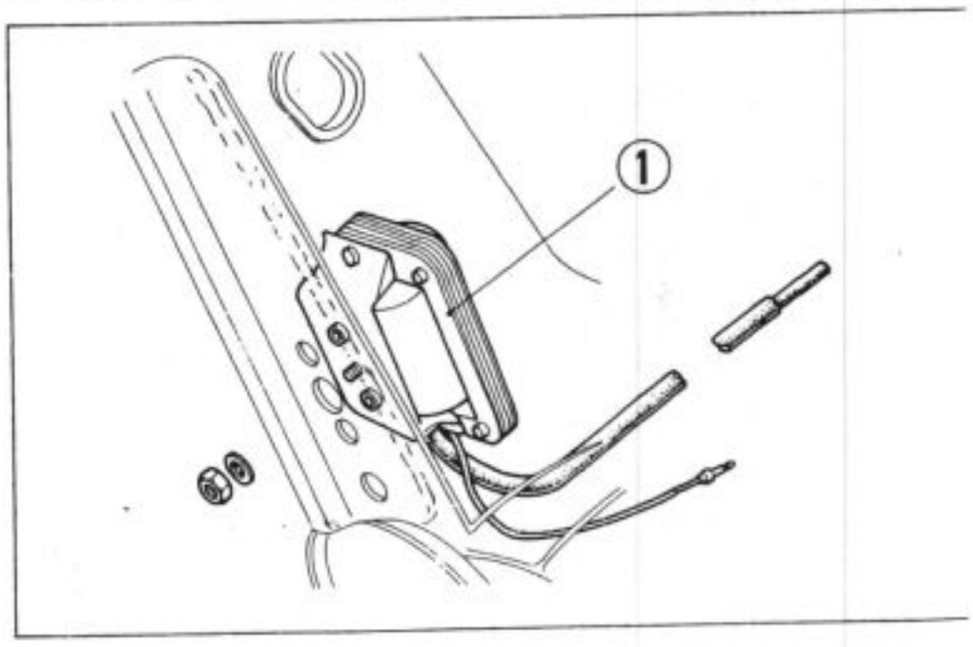

Fig. 4-32
1. Ignition coil

V. ELECTRICAL SYSTEM

1. Charging System

The charging system consists of an AC generator comprising a flywheel magneto and field coil. The alternating current generated by the generator is rectified by the silicon rectifier and the direct current is fed to the battery for charging.

Type	Flywheel
Output	6V
Battery capacity	6V-4AH
Speed under load	500 ~ 11000rpm
Battery polarity (ground)	Negative

1. Charging test

1. Measure the charging current with an ammeter and the voltage with a voltmeter.
2. Use a fully charged battery (6N4-4A) for the test.
   The specific gravity of the electrolyte in each cell should be 1.26 ~ 1.28 at 20° C (68° F).
3. As shown in Figs. 5-1 and 5-2, connect the ammeter to the positive terminal of the battery. Then connect the voltmeter to the positive and negative terminals of the battery.
4. Start the engine. Simulate the NIGHTTIME RIDING and DAYTIME RIDING conditions and take the ammeter and voltmeter readings at each speed. Compare the readings with those in the table below.

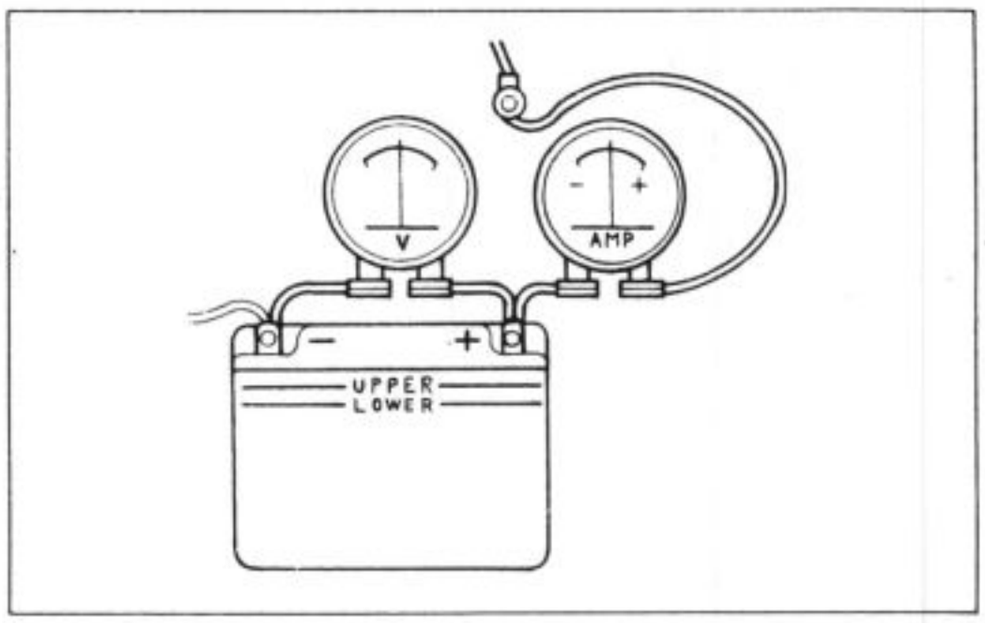

Fig. 5-1
Measuring the charging current and voltage

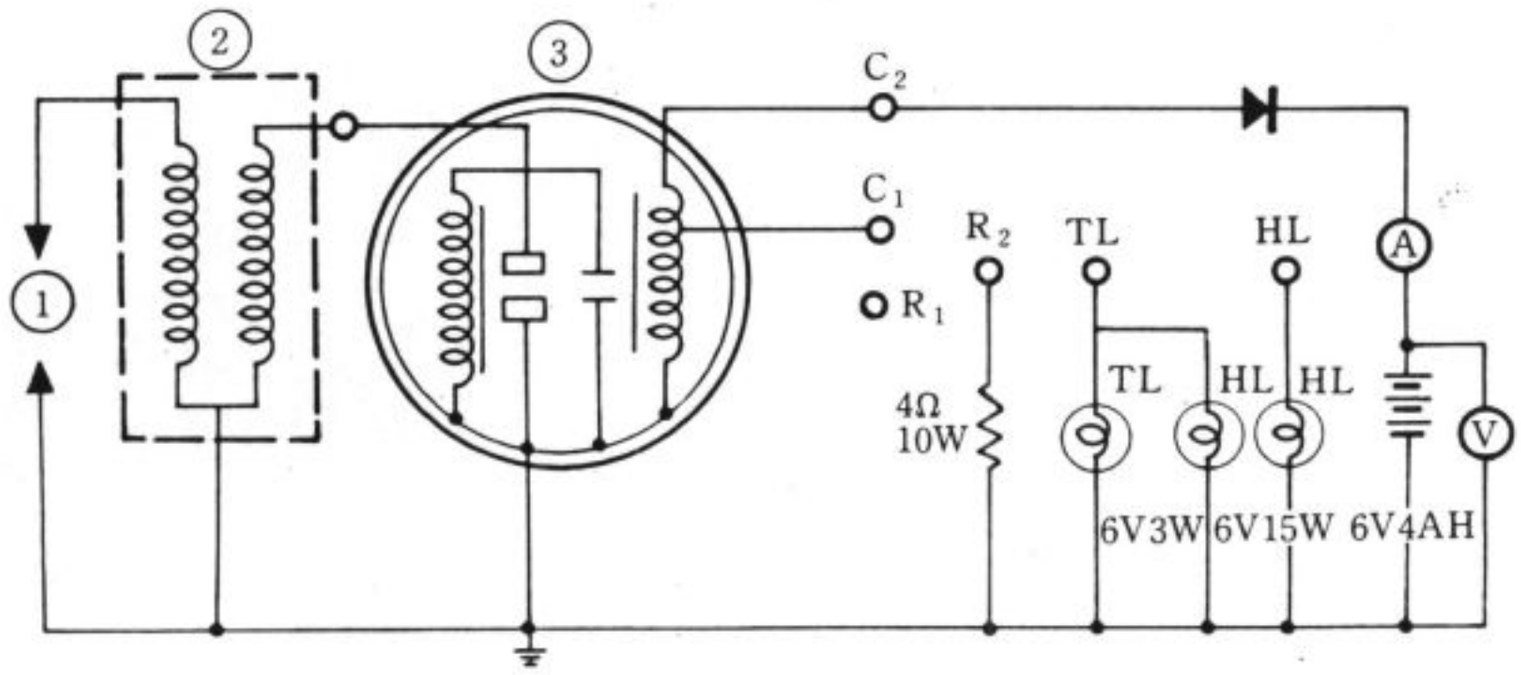

Fig. 5-2
1. Spark plug 2. Ignition coil 3. A.C generator

	Daytime riding	When recharged	Nighttime riding
	$C_1-R_1-R_2$	C_1-R_1	$C_1-HL-TL$
Beginning of charging (rpm)	750, max.	750, max.	1000, max.
4000rpm	0.55 ~ 1.15A	1.3 ~ 1.9A	0.4 ~ 0.7A
8000rpm	2.1A, max.	3.2A, max.	0.6 ~ 1.0A

2. Silicon rectifier

Attach the positive and negative probes of the radio tester to the leads alternatively in each direction. If there is a continuity or no continuity in both directions, the rectifier is defective.

NOTE:

Use a radio tester with the knob in the Ω range.

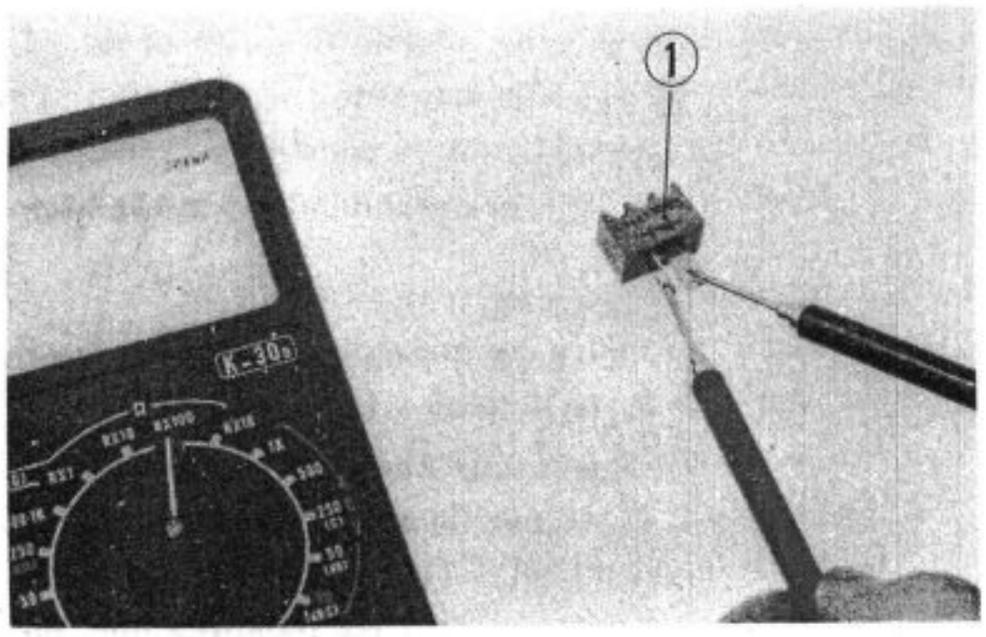

Fig. 5-3
1. Silicon rectifier

3. Battery

1. Specifications

Model	6N4-4A-4
Voltage	6V
Capacity	4AH (10)

2. State of charge

The state of charge of the battery can be easily judged from the specific gravity of the electrolyte. If the specific gravity is below 1.20 (at 20° C or 68° F), recharge the battery. To read the specific gravity of electrolyte, suck the electrolyte until the float rises. Raise the level of electrolyte in the hydrometer to the eye level and read the scale on the float.

3. Servicing

a. Check the electrolyte level in each cell. If it is below the lower mark, add the distilled water up to the upper mark.

b. If the electrolyte level drops excessively, check the charging system for condition.

c. Periodically measure the specific gravity of electrolyte. When adding the distilled water, thoroughly stir the electrolyte before measuring the specific gravity.

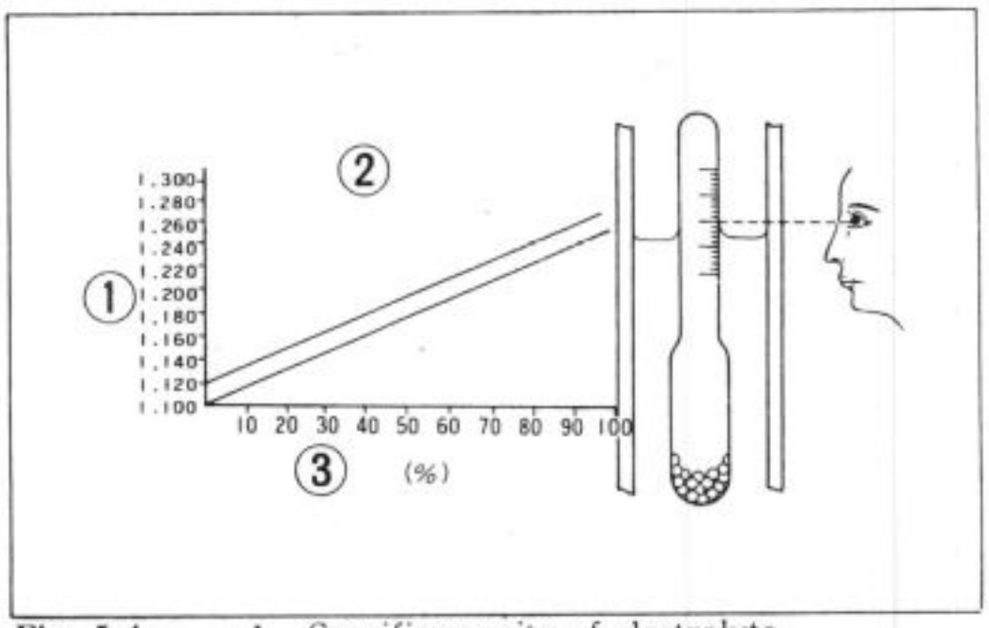

Fig. 5-4 1. Specific gravity of electrolyte
2. Relation between charge and specific gravity
3. Charge(%)

4. Charging

Connection	Charger positive terminal to battery positive terminal. Charger negative terminal to battery negative terminal.
Charging current	0.2A
Completion of charging	Charge until SG value is 1.260~1.280 (at 20° C or 68° F).
Completion of charging (contd)	Air bubbles will be noted in electrolyte at end of charging.
Charging hours	12~13 hours on a battery having 1.220 SG at 20° C or 68° F.

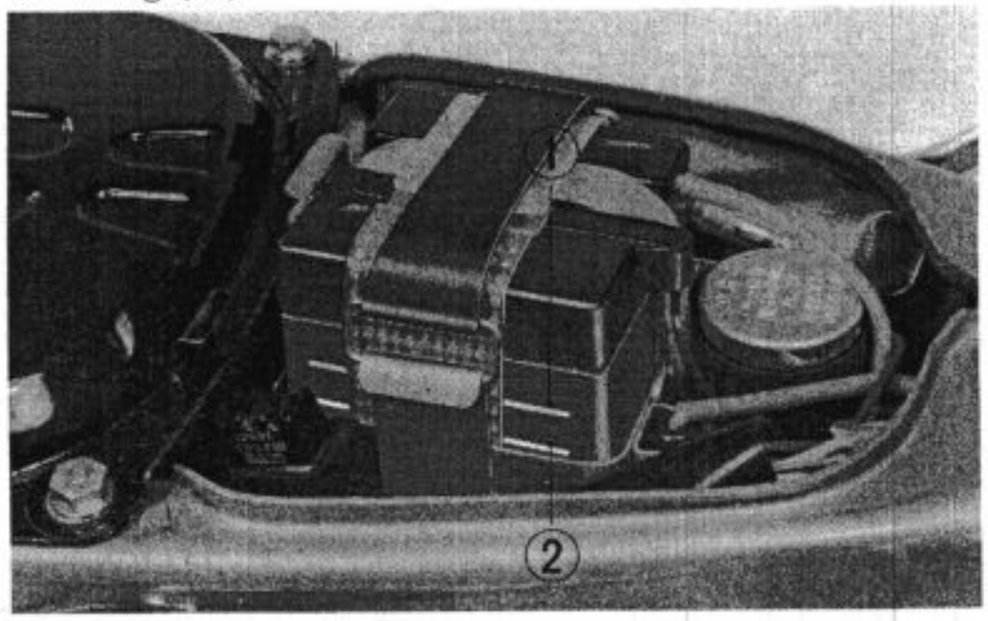

Fig. 5-5
1. Upper mark 2. Lower mark

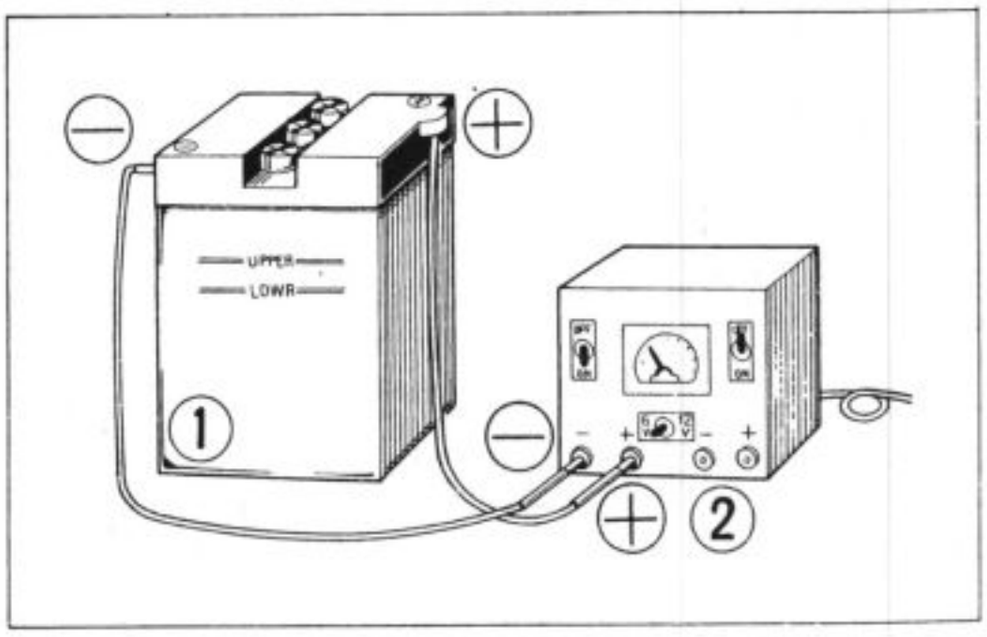

Fig. 5-6
1. Battery 2. Charger

2. Ignition System

1. Ignition coil test

This test is conducted to check the coil performance. If the engine fails to start, check the spark plug, points, condenser for condition.

1. Use a fully charged battery and service tester, and connect them as shown in Fig. 5-7.
2. Turn the service tester selector knob to COIL TEST.
3. Observing the spark jumping across a 3-point spark gap, turn the knob and measure the jumping distance.
4. If the spark jumps more than 6mm (0.2362in.), the coil is in good condition.
5. If the spark appears in the form B in Fig. 5-8, connect the high-tension cord to the tester in the reverse direction and measure the jumping distance with the spark in the form A.

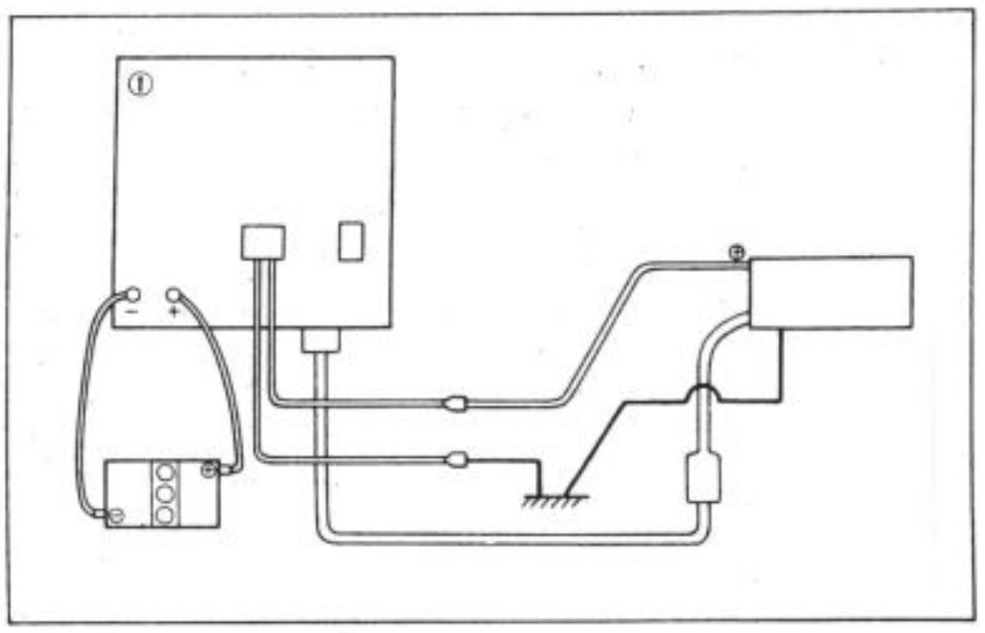

Fig. 5-7
Checking the ignition coil performance

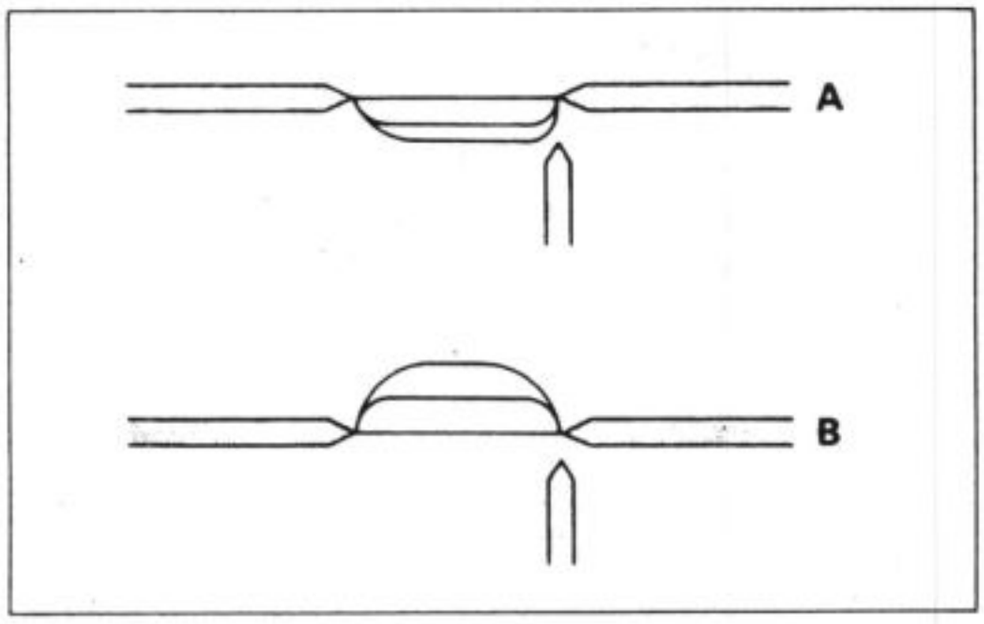

Fig. 5-8
Spark jumping across 3-point spark gap

2. Inspection of condenser

1. Using a service tester, measure the condenser capacity.
2. Turn the service tester, measure the condenser CONDENSER.
3. Attach the probe of the tester to the condenser, and read the scale on the tester.
   Specification: 0.21μF ~ 0.26μF

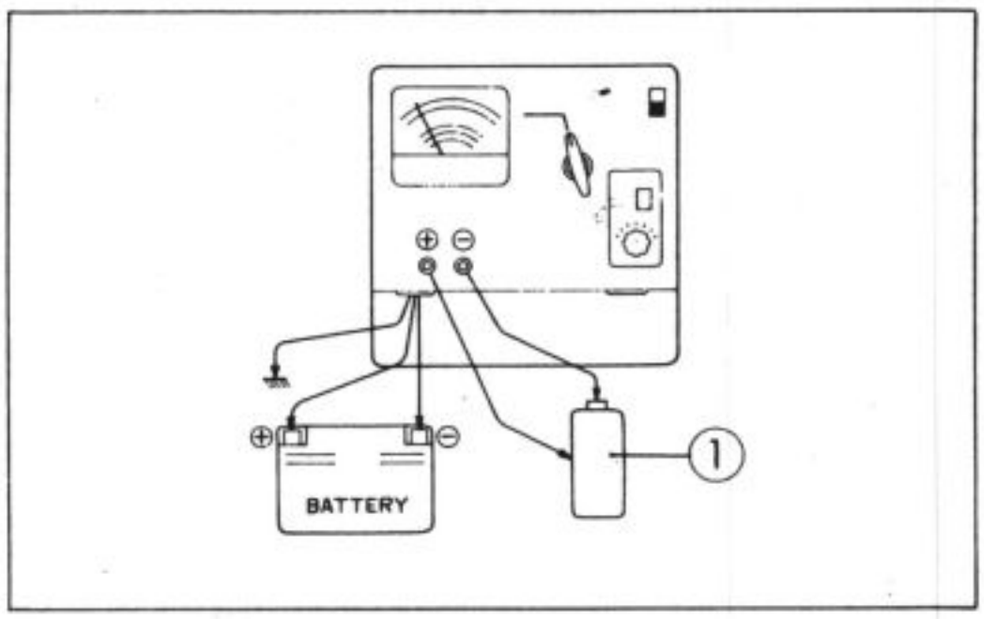

Fig. 5-9
1. Condenser

3. Spark plug inspection

Check the spark plug electrodes for wear, improper gap and fouling. Also check the insulator of the plug for breakage.

1. Clean the plug, if foul, with a plug cleaner or a wire brush.
2. Measure the plug gap with a feeler gauge. If it is out of specification, adjust it.
   Specification: 0.6 ~ 0.7mm (0.024 ~ 0.028in.)
3. If the insulator or gasket is broken or deformed, replace the plug.
   Specified plugs:

Model CF50	C6H(NGK)U20FS(DENSO)
Model CF70	C7HS(NGK)U22FS(DENSO)

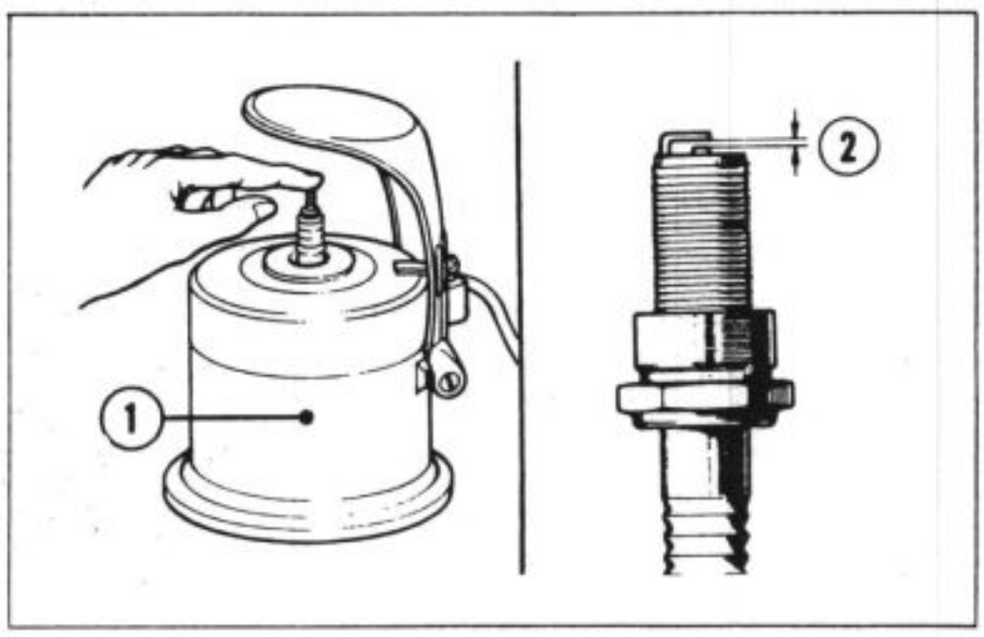

Fig. 5-10
1. Plug cleaner 2. Plug gap

3. Electrical Parts

1. Combination switch

Using a tester, check the combination switch for continuity at each key position (ON, OFF) in accordance with the table below.

		BAT	ST	C_1	R_1	TL	IG	E
OFF					○		○	○
ON	I	○	○	○	○			○
	II	○	○	○		○		○
Cord color		Red/white	Black	Yellow	Blue/white	Brown/red	Black/white	Green

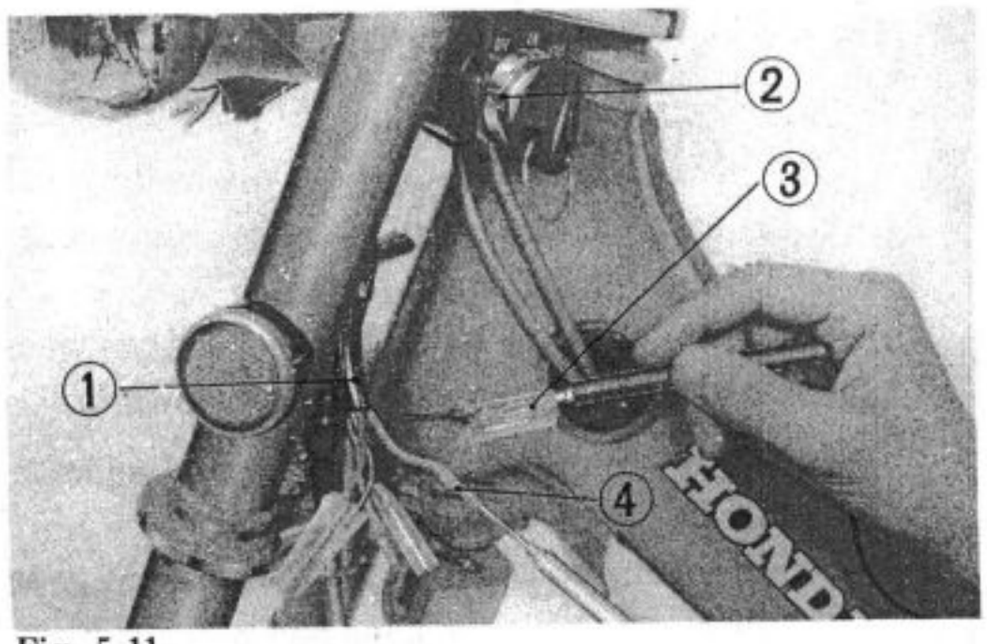

Fig. 5-11
1. Combination switch cord 2. Combination switch
3. Black cord 4. Red/white cord

2. Front brake stop switch

After adjusting the front brake, squeeze the brake lever and check for continuity between the stop switch leads (green/yellow and red) in the headlight case, when the brake free play is 20 ~ 30mm (0.8 ~ 1.2in.) at the tip of the lever. Use a tester.

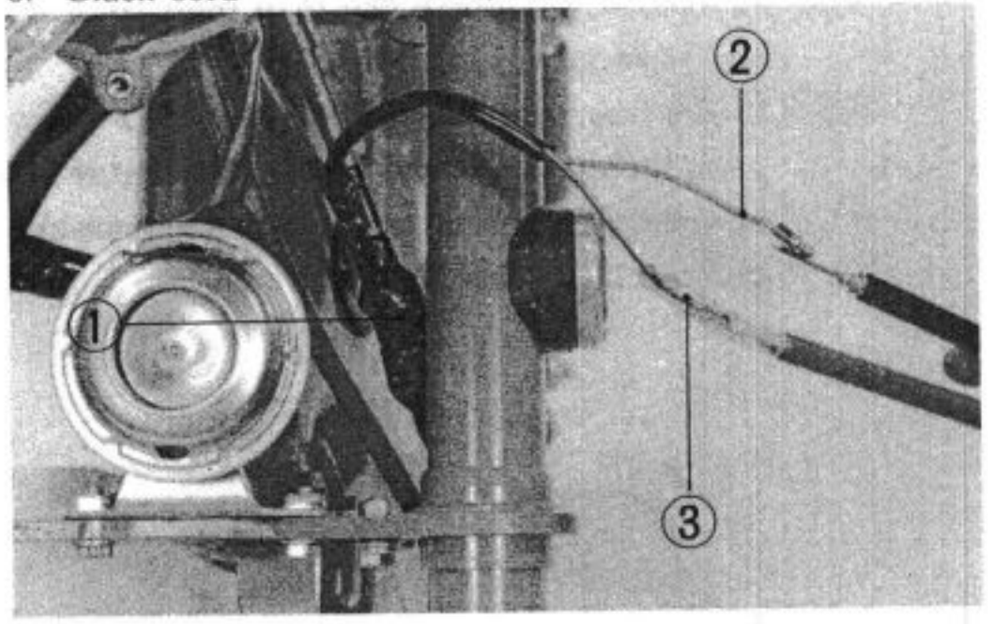

Fig. 5-12 1. Front brake stop switch
2. Red cord 3. Green/yellow cord

3. Rear brake stop switch

Pull the stop switch spring to the end of switch stroke and check for continuity between the stop switch leads (black and green/yellow). If there is no continuity, replace the switch.

The adjustment of the switch timing with pedal depressed can be made by turning the adjusting nut.

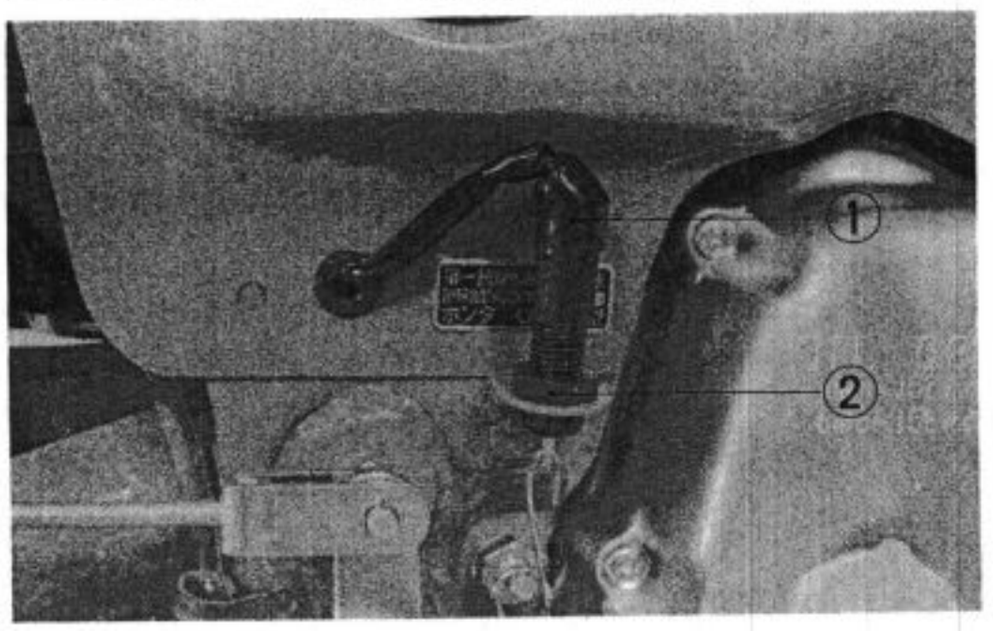

Fig. 5-13
1. Rear brake stop switch 2. Adjusting nut

4. Horn

Disconnect the horn leads (yellowish green and red) from inside the headlight case and connect the red lead to the positive terminal of a 6V battery and the yellowish green cord to the negative terminal. Then check for proper operation. If the horn is not defective, check the horn button for condition.

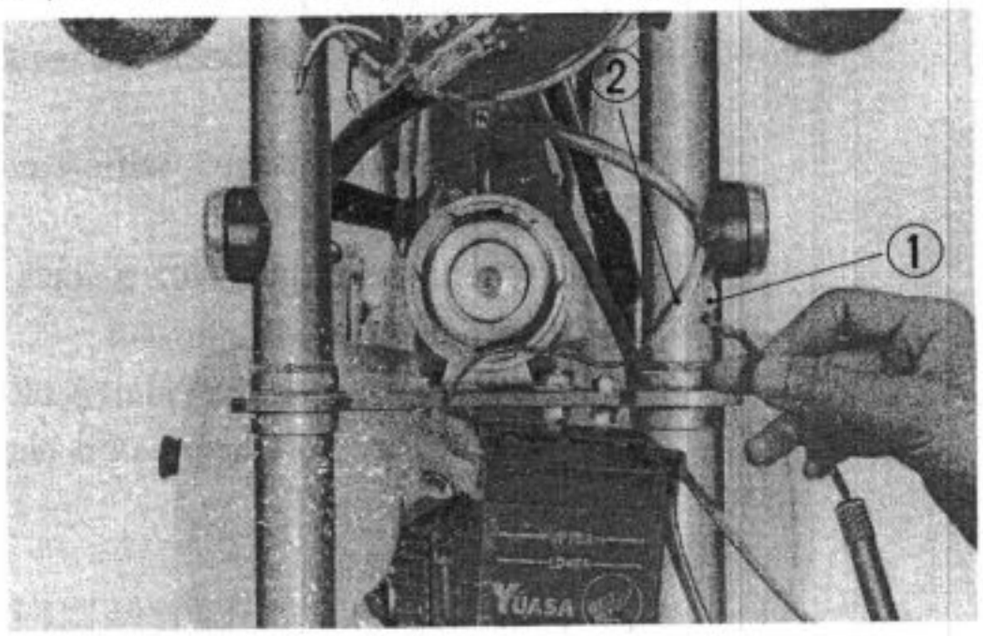

Fig. 5-14
1. Red cord 2. Yellowish green cord

5. Horn button

Disconnect the horn button switch lead (yellowish green) from inside the headlight case and check for continuity between the wire and handlebar pipe. If there is open circuit or if the button is damaged, replace the button.

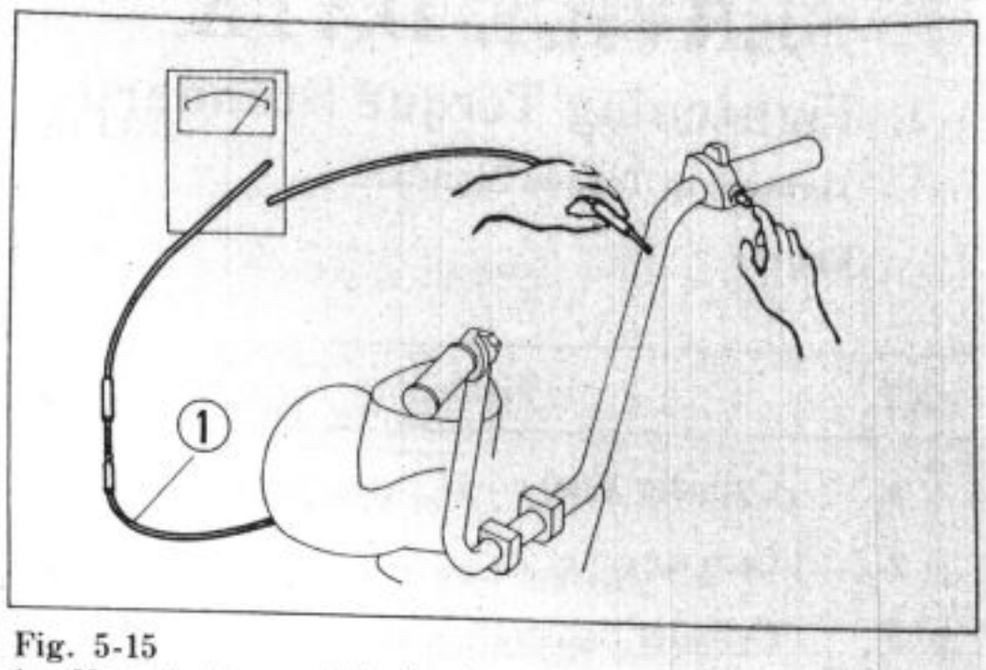

Fig. 5-15
1. Horn button cord (yellowish green)

6. Dimmer switch

Disconnect the dimmer switch leads (white, blue and brown/red) from inside the headlight case and check for continuity between the leads on swith side at each switch knob position. If the continuity is as shown in the table below, the switch is in good position. Use a tester.

	HB	TL	LB
H	○——	——○	
(N)	○——	——○	——○
L		○——	——○
Cord color	Blue	Brown/red	White

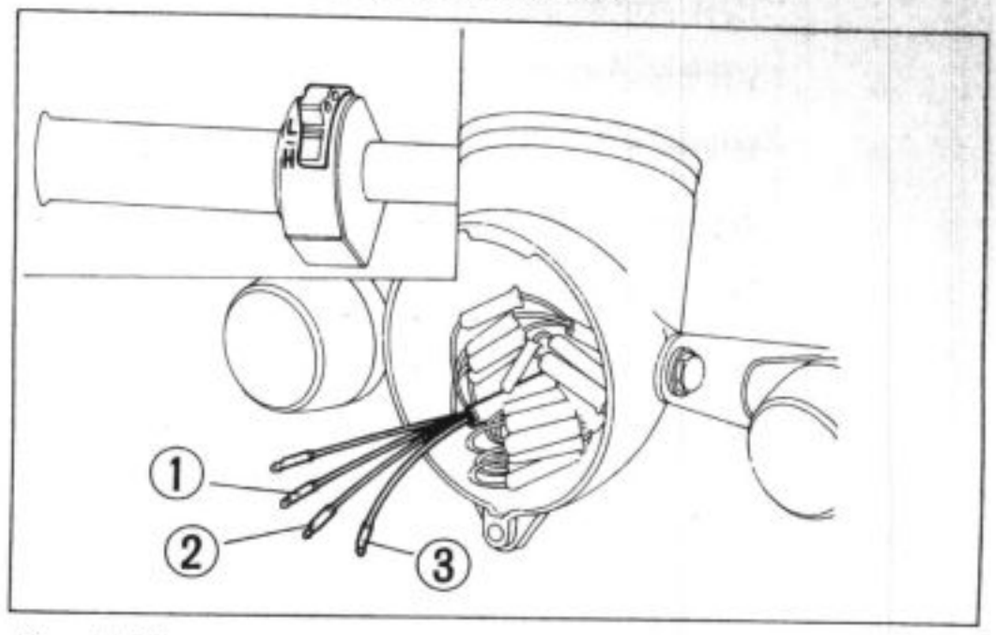

Fig. 5-16 1. Blue cord
2. Brown/red cord 3. White cord

7. Turn signal control switch

Disconnect the turn signal control switch leads (sky-blue, gray and orange) from inside the headlight case and check for continuity between the leads at each switch knob position using a tester. If the continuity is as shown in the table below, the switch is in good condition.

	R		L
R	○——	——○	
OFF			
L		○——	——○
Cord color	Sky-blue	Gray	Orange

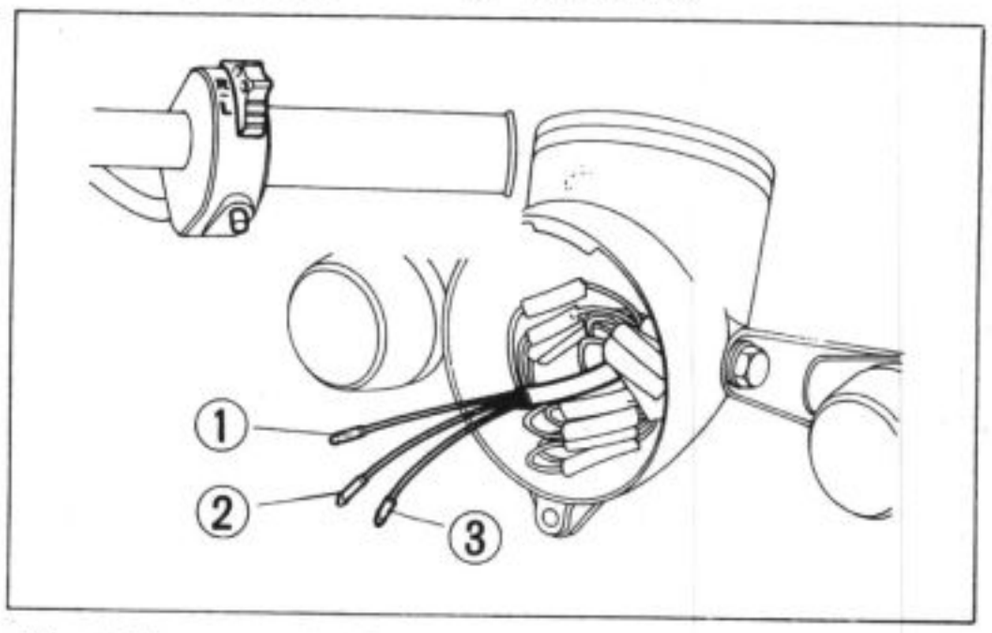

Fig. 5-17 1. Sky-blue cord
2. Gray cord 3. Orange cord

8. Neutral switch

Place the transmission gears in the neutral position and check for continuity between the switch lead and engine using a tester. If there is a continuity at the neutral position only, the switch is in good condition.

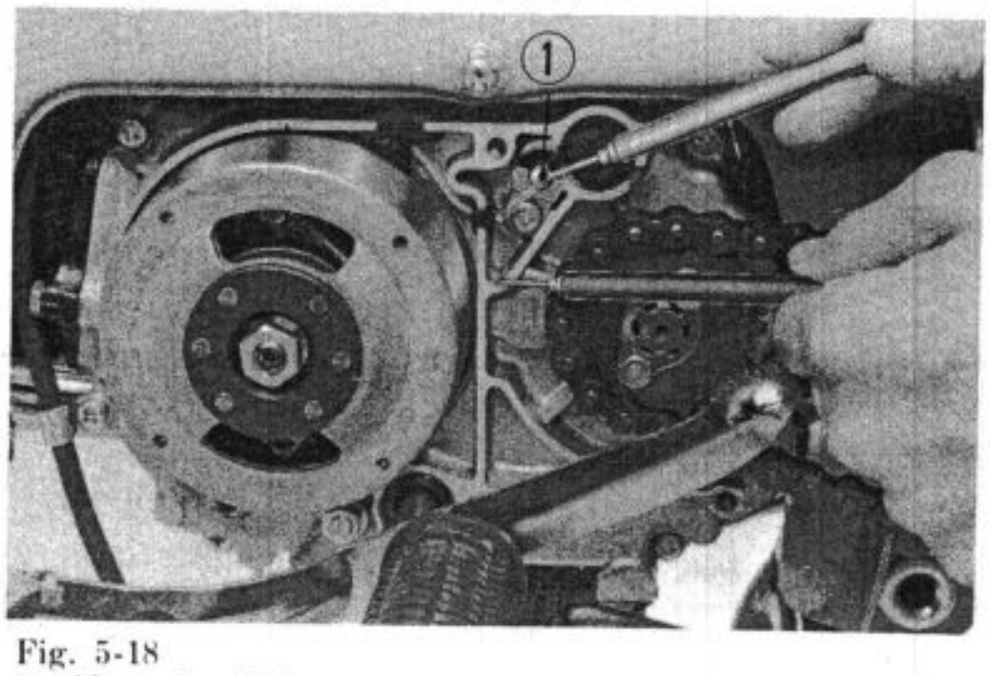

Fig. 5-18
1. Neutral switch

VI. SERVICE DATA

1. Tightening Torque Standard

1. Tightening Torque Standard

Engine

Unit : kg-m (lb-ft)

No.	Tightening point	Qty	Thread dia. (mm)	Torque	
1	Cylinder head cover tightening nut	4	6	0.8 – 1.2	(6 – 9)
2	Cam sprocket lock nut	3	5	0.8 – 1.2	(6 – 9)
3	Cylinder tightening HS bolt	2	6	0.8 – 1.2	(6 – 9)
4	Left crankcase cover tightening screw	8	6	0.7 – 1.0	(5 – 7)
5	Flywheel tightening nut	1	10	2.5 – 3.5	(18 – 25)
6	Right crankcase cover tightening screw	8	6	0.7 – 1.0	(5 – 7)
7	14mm clutch tightening lock nut	1	14	3.8 – 4.5	(27 – 33)
8	Drum stopper arm tightening bolt	1	6	0.8 – 1.2	(6 – 9)
9	Drum tightening side bolt	1	6	0.8 – 1.2	(6 – 9)
10	Drive sprocket tightening bolt	2	6	0.8 – 1.2	(6 – 9)
11	Drain bolt	1	12	2.0 – 2.5	(14 – 18)

Frame

Unit : kg-m (lb-ft)

No.	Tightening point	Qty	Thread dia. (mm)	Torque	
1	Engine hanger bolt	2	8	2.0 – 3.0	(14 – 22)
2	Front axle nut	1	12	4.0 – 5.0	(29 – 36)
3	Rear axle nut	1	12	4.0 – 5.0	(29 – 36)
4	Right and left front shock absorber tightening bolt	2	10	2.5 – 3.5	(18 – 25)
5	Rear brake torque link tightening nut	2	8	1.0 – 1.5	(7 – 11)
6	Right and left rear shock absorber upper tightening nut	2	10	3.5 – 4.5	(25 – 33)
7	Right and left rear shock absorber lower tightening nut	2	10	3.5 – 4.5	(25 – 33)
8	Rear fork pivot bolt	1	10	3.0 – 4.5	(22 – 33)
9	Handlebar lower holder tightening bolt	2	10	4.0 – 5.5	(29 – 40)
10	Handlebar upper holder tightening bolt	4	6	0.8 – 1.2	(6 – 9)
11	Steering stem nut	1	22	6.0 – 8.0	(43 – 58)

The above tightening points are the key points. Tighten the other points to the torque standard below.

Unit : kg-m (lb-ft)

Tightening point	Torque	Tightening point	Torque
6mm screw	0.7 – 1.0 (5 – 7)	8mm hex bolt	1.8 – 2.5 (13 – 18)
6mm hex bolt	0.8 – 1.2 (6 – 9)	10mm hex bolt	3.0 – 4.0 (22 – 29)

2. TECHNICAL SERVICE DATA

Engine

Unit : mm (in.)

Item	Assembly standard	Service limit
Rocker arm ID	10.0 ~ 10.015 (0.3937 ~ 0.3943)	10.1 (0.3976)
Rocker arm shaft OD	9.978 ~ 9.987 (0.3928 ~ 0.3932)	9.91 (0.3902)
Tappet clearance (in cold setting)		
Intake	0.05 (0.0020)	
Exhaust	0.05 (0.0020)	
Valve stem OD		
Intake	5.455 ~ 5.465 (0.2148 ~ 0.2152)	5.4 (0.2126)
Exhaust	5.435 ~ 5.445 (0.2140 ~ 0.2144)	5.4 (0.2126)
Valve-to-guide clearance		
Intake	0.01 ~ 0.03 (0.0004 ~ 0.0012)	0.06 (0.0024)
Exhaust	0.03 ~ 0.05 (0.0012 ~ 0.0020)	0.08 (0.0031)
Valve seat width	1.2 ~ 1.5 (0.0472 ~ 0.0591)	1.8 (0.0709)
Valve guide ID	5.475 ~ 5.485 (0.2156 ~ 0.2159)	5.53 (0.2177)
Valve spring free length		
Inner	25.1 (0.9882)	23.9 (0.9409)
Outer	28.1 (1.1063)	26.9 (1.0591)
Valve spring tension		
Inner	2.45 ~ 2.75/22.7kg/mm (5.40 ~ 6.06/0.8937lb/in.) [7.80 ~ 8.60/17.5kg/mm] (17.20 ~ 18.96/0.6890lb/in.)	
Outer	6.65 ~ 7.75/24.9kg/mm (14.66 ~ 17.09/0.9803lb/in.) [17.60 ~ 20.4/17.9kg/mm] (38.80 ~ 44.97/10.7047lb/in.)	
Camshaft journal OD	28.927 ~ 28.940 (1.1389 ~ 1.1394)	28.8 (1.1339)
Cylinder bore	39.005 ~ 39.015 (1.5356 ~ 1.5360) [47.005 ~ 47.015] (1.8506 ~ 1.8510)	39.05 (1.5374) [47.05] (1.8524)
Piston skirt OD	38.98 ~ 39.00 (1.5346 ~ 1.5354) [46.98 ~ 47.00] (1.8496 ~ 1.8504)	38.9 (1.5315) [46.9mm] (1.8524)
Piston pin clearance in piston	0.002 ~ 0.014 (0.0001 ~ 0.0006)	0.05 (0.0020)

Unit : mm (in.)

Item	Assembly standard	Service limit
Piston ring thickness		
Top	1.175 ~ 1.190 (0.0463 ~ 0.0469)	1.12 (0.0441)
2nd	1.175 ~ 1.190 (0.0463 ~ 0.0469)	1.12 (0.0441)
Oil	2.475 ~ 2.490 (0.0974 ~ 0.0980)	2.42 (0.0953)
Piston ring gap		
Top	0.1 ~ 0.3 (0.0039 ~ 0.0118)	0.5 (0.0197)
2nd	0.15 ~ 0.35 (0.0059 ~ 0.0138)	0.5mm or (0.0197)
Oil	0.1 ~ 0.3 (0.0039 ~ 0.0118)	0.5 (0.0197)
Piston ring side clearance		
Top	0.015 ~ 0.045 (0.0006 ~ 0.0018)	0.12 (0.0047)
2nd	0.015 ~ 0.045 (0.0006 ~ 0.0018)	0.12 (0.0047)
Oil	0.015 ~ 0.045 (0.0006 ~ 0.0018)	0.12 (0.0047)
Clutch friction disc A thickness	2.55 ~ 2.65 (0.1004 ~ 0.1043)	2.3 (0.0906)
Clutch friction disc B thickness	3.35 ~ 3.45 (0.1319 ~ 0.1358)	3.0 (0.1181)
Clutch plate face runout	0.15 (0.0059)	0.20 (0.0079)
Clutch spring free length	22.55 (0.8877) [25.08] (0.9874)	
Clutch spring tension	12.3/7.53 ~ 8.33kg/mm or 2.71/0.2965 ~ 0.3280lb/in. [12.3/9.43 ~ 10.43kg/mm or 2.71/0.3713 ~ 0.4106lb/in.]	
Oil pump displacement	1.3ℓ (1.14USqt)/8000rpm	
Oil pump body-to-outer rotor clearance	0.1 ~ 0.15 (0.0039 ~ 0.0059)	0.2 (0.0079)
Oil pump rotor-to-pump cover clearance	0.02 ~ 0.07 (0.0008 ~ 0.0028)	0.12 (0.0047)
Cam chain tensioner spring A		
Free length	65.0 (2.5591)	
Tension	405 ~ 495/25.0g/mm (0.89 ~ 1.09/0.9843lb/in.)	
Cam chain tensioner spring B		
Free length	49.8 (1.9606)	
Tension	405 ~ 495/26.5g/mm (0.89 ~ 1.09/1.0433lb/in.)	
Gear shift fork ID	34.00 ~ 34.025 (1.3386 ~ 1.3396)	34.065 (1.3411)

Unit : mm (in.)

Item	Assembly standard	Service limit
Gear shift drum OD	33.950 ~ 33.975 (1.3366 ~ 1.3376)	33.93 (1.3358)
Gear shift fork left tip thickness	4.86 ~ 4.94 (0.1913 ~ 0.1945)	4.6 (0.1811)
Gear shift fork right tip thickness	5.860 ~ 5.94 (0.2307 ~ 0.2339)	5.6 (0.2205)
Transmission gear backlash	0.08 ~ 0.17 (0.0031 ~ 0.0067)	0.2 (0.0079)
Connecting rod small end ID	13.013 ~ 13.043 (0.5123 ~ 0.5135)	13.1 (0.5157)
Connecting rod big end axial play	0.10 ~ 0.35 (0.0039 ~ 0.0138)	0.5 (0.0197)
Connecting rod big end radial play	0 ~ 0.012 (0.0005)	0.05 (0.0020)
Connecting rod big and small end offset	0.04 (0.0016)	0.1 (0.0039)
Crankshaft runout (at 30 mm or 1.1811 in. points from crankshaft end faces)	0.015 (0.0006)	0.05 (0.0020)

NOTE :
Figures in millimeter in [ ] are for the model CF70.

Frame

Unit : mm (in.)

Item	Assembly standard	Service limit
Front axle shaft bend	0.05 (0.0020)	0.1 (0.0039)
Front wheel bearing axial play	0.002 ~ 0.007 (0.0001 ~ 0.0003)	0.05 (0.0020)
Front wheel bearing radial play	0.002 ~ 0.007 (0.0001 ~ 0.0003)	0.05 (0.0020)
Front wheel rim runout	0.5 (0.0197)	2.0 (0.0787)
Brake drum-to-lining clearance	0.25 (0.0098)	
Brake lining thickness	3.75 (0.1476)	2.0 (0.0787)
Brake drum (wheel hub) ID	110.0 (4.3307)	111.0 (4.3701)
Rear axle shaft bend	0.05 (0.0020)	0.1 (0.0039)
Rear wheel bearing axial play	0.002 ~ 0.007 (0.0001 ~ 0.0003)	0.05 (0.0020)
Rear wheel bearing radial play	0.002 ~ 0.007 (0.0001 ~ 0.0003)	0.05 (0.0020)
Rear wheel rim runout	0.5 (0.0197)	2.0 (0.0787)
Front shock absorber spring free length	200 (7.8740)	

Unit : mm (in.)

Item	Assembly standard	Service limit
Front shock absorber spring tension	40 ± 2.4/147.5 kg/mm (82.89 ~ 93.47/ 5.8071 lb/in.)	
Rear shock absorber spring free length	210 (8.2677)	
Rear shock absorber spring tension	44 ± 2.0/175 kg/mm (92.59 ~ 101.41/6.8898 lb/in.) 89.5 ± 4.5/150 kg/mm (187.39 ~ 207.23/5.9055 lb/in.)	

NOTE:

Figures in milimeter in [ ] are for the model CF70.

3. Trouble Shooting

Trouble	Cause	Remedy
Engine will not start or fails to start.	1. Insufficient compression pressure	
	① Maladjusted tappet clearance	Readjust.
	② Worn valve guides	Replace.
	③ Maladjusted valve timing	Retime.
	④ Worn piston rings	Replace.
	⑤ Worn cylinder	Replace.
	2. No spark from plug or on points	
	① Foul plug	Clean.
	② Wet plug	Clean.
	③ Foul points	Clean.
	④ Incorrect point gap	Adjust.
	⑤ Incorrect ignition timing	Adjust.
	⑥ Defective ignition coil	Replace.
	⑦ Open or short circuit in ignition cords	Replace.
	⑧ Short circuit in condenser	Replace.
	3. No gasoline is fed to carburetor.	
	① Clogged tank cap hole	Clean.
	② Clogged fuel cock	Clean.
	③ Defective carburetor float valve	Replace.
	④ Clogged fuel pipe	Clean.
Engine stalls frequently.	1. Foul plug	Clean.
	2. Foul points	Clean.
	3. Incorrect ignition timing	Adjust.
	4. Clogged fuel lines	Clean.
	5. Clogged carburetor jets	Clean.
	6. Maladjusted tappet clearance	Readjust.

Trouble	Cause	Remedy
Engine is noisy.	1. Tappets	
	① Too large a tappet clearance	Adjust.
	② Weak valve springs	Replace.
	2. Piston	
	① Worn piston or cylinder	Replace.
	② Carbon deposits on combustion chamber wall	Decarbon.
	③ Worn piston pin or connecting rod small end	Replace.
	3. Cam chain	
	① Elongated chain	Shorten or replace.
	② Worn cam sprocket or timing sprocket	Replace.
	4. Clutch	
	① Loose clutch center spline	Replace.
	② Too large a clearance between friction disc and clutch outer	Replace.
	③ Friction disc or clutch plate face runout	Repair or replace.
	5. Crankshaft	
	① Excessive crankshaft runout	Repair.
	② Loose crankshaft bearings	Replace.
	③ Loose connecting rod big end	Replace.
	6. Gears	
	① Worn gears or other defects	Replace.
	② Worn transmission shaft splines	Replace.
	③ Worn primary gear or other defects	Replace.
Clutch slips.	1. Maladjusted clutch (no free play)	Readjust.
	2. Weak clutch springs	Replace.
	3. Worn or deformed pressure plates	Replace.
	4. Deformed clutch plates	Replace.
	5. Worn or deformed friction discs	Replace.
Clutch drags.	1. Maladjusted clutch (no free play)	Readjust.
	2. Unequal clutch spring tension	Replace.
	3. Deformed clutch plates	Replace.
Transmission gears fail to be smoothly or sequentially.	1. Broken gear shift fork tips	Replace.
	2. Broken gear shift forks	Replace.
	3. Deformed gear shift forks	Repair or replace.
Change pedal fails to return	1. Broken gear shift return spring or detached spring	Repair or replace.
	2. Contact between case and gear shift spindle	Repair.
Transmission gears disengage accidentally.	1. Worn main shaft or countershaft shifting gears	Replace.
	2. Bent or worn gear shift forks	Repair or replace.
	3. Weak gear shift drum stopper spring	Replace.
Engine operation is erratic at low speeds.	1. Maladjusted tappet clearance	Readjust.
	2. Improper cylinder head valve seat contact	Replace.
	3. Worn or sticking valve guides	Replace.
	4. Incorrect ignition timing	Adjust.
	5. Damaged or foul points	Repair or replace.

Trouble	Cause	Remedy
	6. Too large a plug gap	Adjust.
	7. Weak spark (defective condenser or ignition coil)	Replace.
	8. Incorrect float level	Adjust.
	9. Maladjusted carburetor air screw	Readjust.
Engine operation is erratic at high speed	1. Weak valve springs	Replace.
	2. Maladjusted valve timing	Retime.
	3. Too small a plug gap	Adjust.
	4. Too retarded ignition timing	Adjust.
	5. Weak point arm spring	Replace.
	6. Defective ignition coil	Replace.
	7. Too low float level	Adjust.
	8. Clogged air cleaner element	Clean.
	9. Insufficient gasoline is fed to carburetor.	Clean or add.
Steering is hard.	1. Broken steering steel balls	Replace.
	2. Bent steering stem	Repair or replace.
	3. Excessively tightened steering cone races	Tighten to specified torque.
	4. Too low tire inflation pressure	Inflate to specified pressure.
Shock absorber is spongy.	1. Weak springs	Replace.
Braking effect is poor.	1. Worn brake linings	Replace.
	2. Foreign materials adhered to linings	Clean.
	3. Improperly engaged brake arm serration	Repair.
	4. Worn brake cams	Replace.
Exhaust gases are very smoky.	1. Excessive engine oil	Check oil level and drain excess oil if necessary.
	2. Excessively worn cylinder or piston rings	Replace.
	3. Worn valve guides	Replace.
	4. Scored or scratched cylinder	Replace.
Engine does not develop sufficient power.	1. Maladjusted tappet clearance	Readjust.
	2. Weak valve springs	Replace.
	3. Maladjusted valve timing	Retime.
	4. Worn cylinder or piston rings	Replace.
	5. Improper valve seat contact	Replace.
	6. Incorrect ignition timing	Adjust.
	7. Defective points	Repair or replace.
	8. Incorrect plug gap	Adjust.
	9. Clogged carburetor jets	Clean.
	10. Incorrect float level	Adjust.
	11. Clogged air cleaner element	Clean
Engine is overheating.	1. Carbon deposits on cylinder head	Decarbon.
	2. Insufficient oil	Add to specified mark.
	3. Defective oil pump or clogged oil passages	Replace or clean.
	4. Too low float level	Adjust.
	5. Too advanced ignition timing (knocking is heard)	Adjust.

ELECTRICAL SYSTEM

Trouble	Cause	Remedy
Engine will not start.	1. Battery	
	① Run-down battery	Recharge.
	② Sulphated battery	Replace.
	③ Improper battery cord terminal connection	Repair
	2. Combination switch	
	① Poor continuity	Replace.
	② Poor insulation	Replace.
	③ Improper combination switch cord terminal connection	Replace.
	3. Ignition coil	
	① Open or short circuit in coil	Replace.
	② Poor high-tension cable insulation	Replace.
	③ Improper coil cord terminal connection	Repair.
	4. Contact breaker	
	① Incorrect point gap	Adjust.
	② Foul points	Clean.
	③ Improper point contact	Repair.
	④ Improper primary winding connection	Repair.
	5. Condenser	
	① Poor insulation	Replace.
	② Excessive capacity	Replace.
	6. Incorrect ignition timing	Adjust.
	7. Improper winding cord terminal connection	
	① Improper wiring cord terminal connection	Repair.
Battery is run down	1. Battery terminals and electrolyte	
	① Insufficient electrolyte	Add.
	② Improper terminal connection	Repair.
	③ Sulphated battery	Replace.
	2. Generator	
	① Demagnetized flywheel	Replace.
	② Short circuit in coil	Replace.
	③ Open circuit in coil or improper connection	Replace.
	3. Silicon rectifier	
	① Poor continuity (There is a continuity in reverse direction.)	Replace.
	4. Wiring	
	① Improper wiring cord terminal connection	Repair.
Turn signal lights flash improperly.	1. Bulbs	
	① Incorrect wattage	Replace.
flash too early	② Open circuit	Replace
flash too late	2. Turn signal relay	
will not flash	① Improper contact	Replace.
	② Defective turn signal relay	Replace.
	3. Turn signal switch	
	① Improper contact	Replace.
	② Improper switch cord terminal connection	Repair.

Trouble	Cause	Remedy
	4. Battery	
	① Discharged battery	Recharge.
	② Improper terminal connection	Repair.
	5. Wiring	
	① Improper wiring cord terminal connection	Repair.
Horn sounds improperly or will not sound.	1. Horn	
	① Improper contact	Replace.
	② Cracked diaphram	Replace.
	③ Improper cord connection	Repair.
	④ Defective horn	Repair.
	2. Horn switch	
	① Improper contact	Replace.
	② Improper switch cord connection	Repair.
	3. Wiring	
	① Improper wiring cord terminal connection	Repair.
Taillight or headlight will not come on.	1. Bulb	
	① Defective bulb (open circuit)	Replace.
	② Improper bulb terminal connection	Repair.
	2. Lighting switch	
	① Improper contact or open circuit	Replace
	3. Wiring	
	① Improper wiring cord terminal connection	Repair.
Stop light will not come on.	1. Bulb	
	① Defective bulb (open circuit)	Replace.
	② Improper bulb terminal connection	Repair.
	2. Front stop switch	
	① Improper contact	Replace.
	② Defective switch	Replace.
	③ Improper switch cord connection	Repair.
	3. Rear stop switch	
	① Improper contact	Repair
	② Defective switch	Replace.
	③ Improper switch cord connection	Repair.
	4. Wiring	
	① Improper wiring cord terminal connection	Repair.

4. Maintenance schedule

MAINTENANCE SCHEDULE This maintenance schedule is based upon average riding conditions. Machines subjected to severe, use, or ridden in unusually dusty areas, require more frequent servicing.	INITIAL SERVICE PERIOD	REGULAR SERVICE PERIOD Perform at every indicated month or mileage interval, whichever occurs first.			
	500 miles	1 month	3 months	6 months	12 months
		500 miles	1,500 miles	3,000 miles	6,000 miles
ENGINE OIL – Change.	●	○	○		
CENTRIFUGAL OIL FILTER – Clean.					○
OIL FILTER SCREEN – Clean.					○
SPARK PLUG – Clean and adjust gap or replace if necessary.				○	
CONTACT POINTS AND IGNITION TIMING – Clean, check, and adjust or replace if necessary.	●			○	
* VALVE TAPPET CLEARANCE – Check, and adjust if necessary.	●			○	
* CAM CHAIN TENSION – Adjust.	●			○	
PAPER AIR FILTER ELEMENT – Clean	(Service more frequently if operated in dusty areas)			○	
PAPER AIR FILTER ELEMENT – Replace					○
* CARBURETOR – Check, and adjust if necessary.	●			○	
THROTTLE OPERATION – Inspect cable. Check, and adjust free play.	●			○	
FUEL FILTER SCREEN – Clean.				○	
FUEL LINES – Check.				○	
* CLUTCH – Check operation, and adjust if necessary.	●			○	
DRIVE CHAIN – Check lubricate, and adjust if necessary.	* * ●	○			
BRAKE SHOES – Inspect, and replace if worn.				○	
BRAKE CONTROL LINKAGE – Check linkage and adjust free play if necessary.	●			●	
* WHEEL RIMS – Check. True whells, if necessary.	●			○	
TIRES – Inspect and check air pressure.	●	○			
FRONT AND REAR SUSPENSION – Check operation.				○	
REAR FORK BUSHING – Grease, check for excessive looseness.				○	
* STEERING HEAD BEARINGS – Adjust.					○
BATTERY – Check electrolyte level, and add water if necessary.	●		○		
LIGHTING EQUIPMENT – Check and adjust if necessary.	●	○			
ALL NUTS, BOLTS, AND OTHER FASTNERS – Check security and tighten if necessary.	●	○			

Items marked * should be serviced by an authorized Honda dealer, unless the owner has proper tools and is mechanically proficient. Other maintenance items are simple to perform and may be serviced by the owner.

* * INITIAL SERVICE PERIOD 200 MILES.

5. Specifications

CF 50

	Item	English	Metric
Dimension	Overall length	63.6 in.	1615 mm
	Overall width	24.8 in.	630 mm
	Overall height	37.8 in.	960 mm
	Wheel base	43.3 in.	1100 mm
	Seat height	27.6 in.	700 mm
	Ground clearance	4.9 in.	125 mm
	Dry weight	152 lbs.	69 kg
Frame	Type	Back borne	
	F. suspension, travel	Telescopic fork, travel 2.2 in. (55 mm)	
	R. suspension, travel	Swing arm, travel 2.5 in. (64 mm)	
	F. tire size, pressure	3.50−10−2PR (4PR), 1.2 kg/cm^2 17 psi	
	R. tire size, pressure	3.50−10−4 PR (4PR), 2.0 kg/cm^2 20 psi	
	F. brake, lining area	Iternal expanding shoes, swept area 13.4 sq-in (86.4 sq-cm)	
	R. brake, lining area	Internal expanding shoes, swept area 13.4 sq-in (86.4 sq-cm)	
	Fuel capacity	0.6 US gal.	2.8 lit
	Fuel reserve capacity	0.2 US gal.	0.8 lit.
	Caster angle	65°	
	Trail length	2.2 in.	56 mm
Engine	Type	Air cooled, 4-stroke OHC engine	
	Cylinder arrangement	Single cylinder 80° inclined from vertical	
	Bore and stroke	1.535 × 1.630 in.	39.0 × 41.4 mm
	Displacement	3.0 cu-in	49 cc
	Compression ratio	8.8 : 1	
	Valve train	Chain driven over head camshaft	
	Maximum horsepower	3.5 PS/7,500 rpm	
	Maximum torque	2.7 lb-ft/6,000 rpm	0.37 kg-m/6,000 rpm
	Oil capacity	0.7 US qt.	0.8 lit.
	Lubrication system	Forced and wet sump	
	Cylinder head compression pressure	12 kg/sq-cm at 1,000 rpm	
	Intake valve Opens	BTDC 7°	
	Intake valve Closes	ABDC 12°	
	Exhaust valve Opens	BBDC 22°	
	Exhaust valve Closes	ATDC 2°	
	Valve tappet clearance	IN-EX 0.0002 in.	IN-EX 0.05 mm
	Idle speed	1,300 rpm	
Drive train	Clutch	Wet, multi plate type	
	Transmission	3-speed constant mesh	
	Primary reduction	4.058	
	Gear ratio I	3.272	
	Gear ratio II	1.823	
	Gear ratio III	1.190	
	Final reduction	2.533, drive sproket 15T, driven sproket 38T	
	Gear shift pattern	Left foot operated return system	
Electrical	Ignition	Flywheel magneto	
	Starting system	Kick starter	
	Alternator	Flywheel	
	Spark plug	NGK C6H or ND U20FS	

CF 70

	Item		English	Metric
Dimension	Overall length		63.6 in.	1,615 mm
	Overall width		24.8 in.	630 mm
	Overall height		37.8 in.	960 mm
	Wheel base		43.3 in.	1,100 mm
	Seat height		27.6 in.	700 mm
	Ground clearance		4.9 in.	125 mm
	Dry weight		154 lbs.	73 kg
Frame	Type		Back born type	
	F. suspension, travel		Telescopic fork, travel 2.2 in. (55 mm)	
	R. suspension, travel		Swing arm, travel 2.5 in. (64 mm)	
	F. tire size, pressure		3.50 – 10 – 2PR (4PR), 17 psi (1.2 kg/sq-cm)	
	R. tire size, pressure		3.50 – 10 – 2PR (4PR), 28 psi (2.0 kg/sq-cm)	
	F. brake, lining area		Internal expanding shoes, swept area 14 sq-in (86.4 sq-cm)	
	R. brake, lining area		Internal expanding shoes, swept area 14 sq-in (86.4 sq-cm)	
	Fuel capacity		0.6 US gal.	2.8 lit.
	Fuel reserve capacity		0.2 US gal.	0.8 lit.
	Caster angle		65°	
	Trail length		2.2 in.	56 mm
Engine	Type		Air cooled, 4-stroke OHC engine	
	Cylinder arrangement		Single cylinder 80° inclined from vertical	
	Bore and stroke		1.850 × 1.630 in.	47.0 × 41.4 mm
	Displacement		4.4 cu-in	72 cc
	Compression ratio		8.8 : 1	
	Valve train		Chain driven over head camshaft	
	Maximum horsepower		4.5 PS/7,000 rpm	
	Maximum torque		3.8 lb-ft/5,000 rpm	0.53 kg-m/5,000 rpm
	Oil capacity		0.7 US qt.	0.8 lit.
	Lubrication system		Forced and wet sump	
	Cylinder head compression pressure		12 kg/sq-cm at 1,000 rpm	
	Intake valve	Opens	BTDC 0°	
		Closes	ABDC 20°	
	Exhaust valve	Opens	BBDC 25°	
		Closes	ATDC 5°	
	Valve tappet clearance		IN–EX 0.002 in.	IN–EX 0.05 mm
	Idle speed		1,300 rpm	
Drive train	Clutch		Wet, multi plate type	
	Transmission		3-speed constant mesh	
	Primary reduction		4.058	
	Gear ratio I		3.272	
	Gear ratio II		1.722	
	Gear ratio III		1.190	
	Final reduction		2.400, drive sproket 15T, drivens sproket 36T	
	Gear shift pattern		left foot operated return system	
Electrical	Ignition		Flywheel magneto	
	Starting system		Kick starter	
	Alternator		Flywheel	
	Spark plug		NGK C7HS or ND U22FS	

6. Special Tools

①

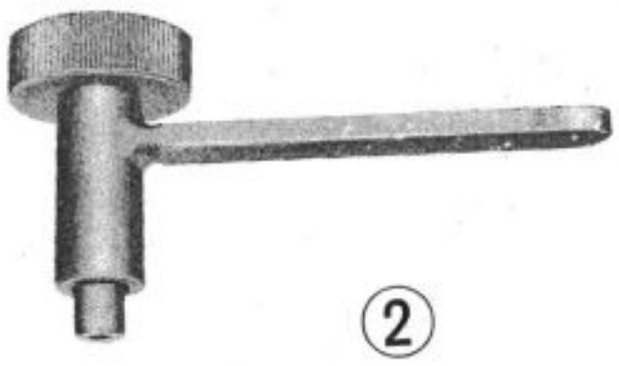

②

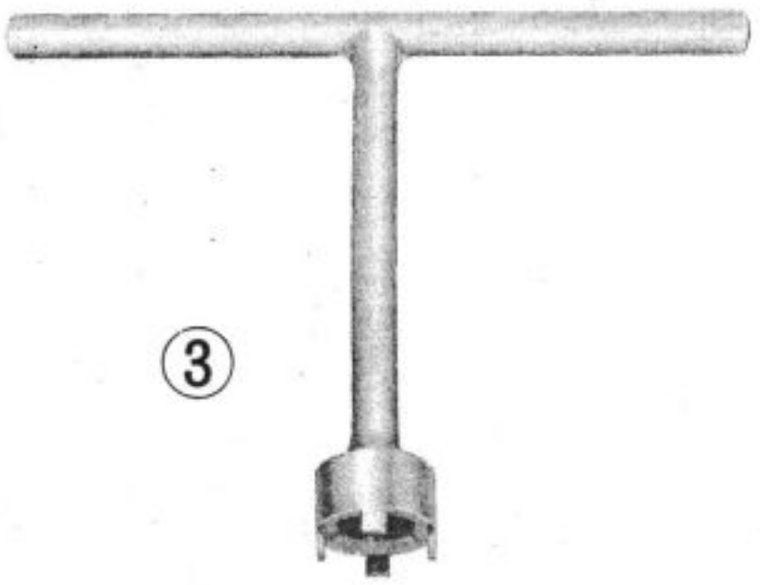

③

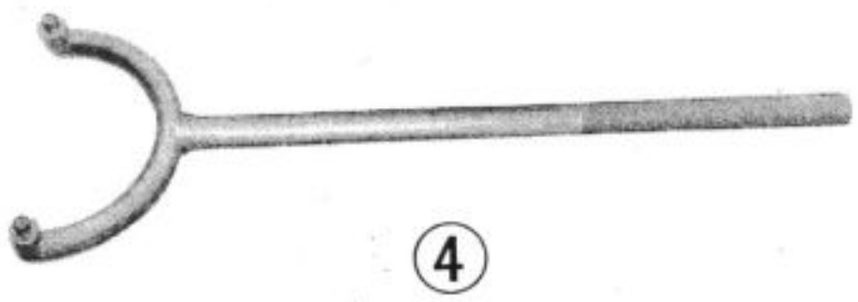

④

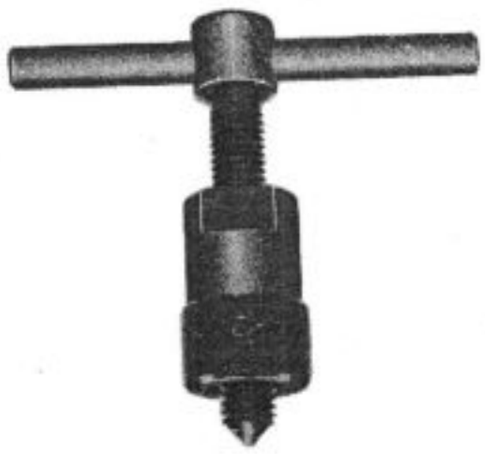

⑤

⑥

⑧

⑦

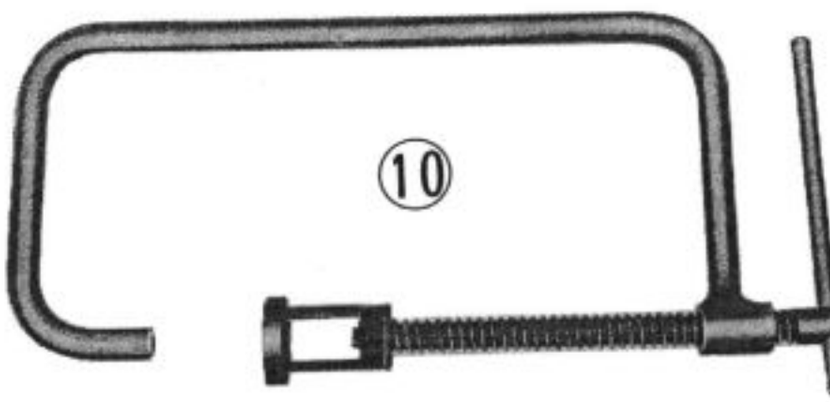

⑩

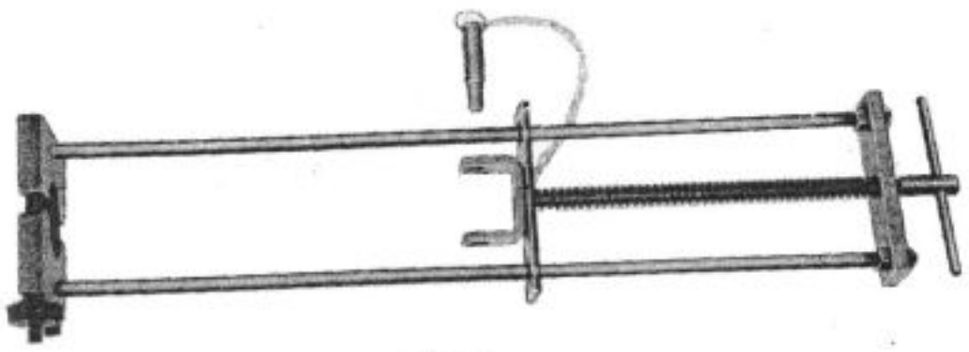

⑪

⑫

⑬

⑭

⑮

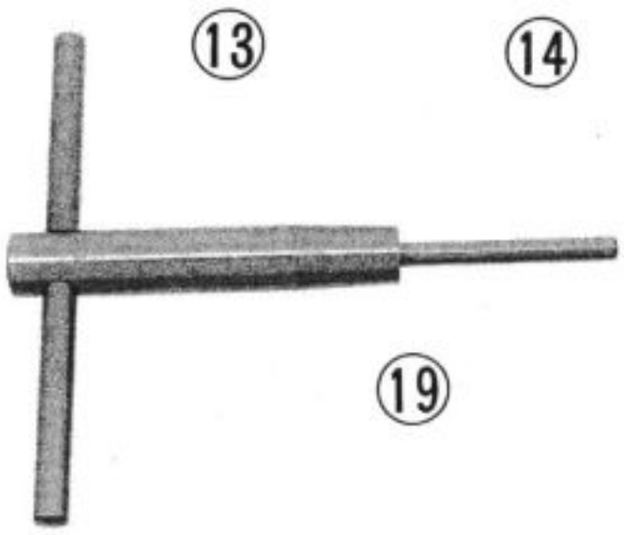

⑲

⑯

⑰

⑱

Ref. no.	Tool no.	Tool name	Remarks
①	07902 – 0980000	37mm front shock absorber cover wrench	Use ST50/70 sackers.
②	07908 – 0010000	Tappet wrench set	Use C100/110 tappet wrench sets.
③	07916 – 2830000	14 mm lock nut wrench	Use CB450 wrench.
④	07923 – 0400000	Clutch outer holder	Use C65 holder.
⑤	07933 – 0010000	Flywheel puller	Use C100/110 pullers.
⑥	07942 – 3290100	Valve guide installer	Use XL250 valve guide installer.
⑦	07942 – 3290200	Valve guide remover	Use XL250 valve guide remover.
⑧	07944 – 0980000	Front shock absorber pin remover	Use ST50/70 removers.
⑨	07945 – 3230200	Bearing driver	Use CB500 driver.
⑩	07957 – 3290000	Valve lifter	Use XL250 valve lifter.
⑪	07959 – 3290000	Rear shock absorber compressor	Use XL250 compressor.
⑫	07984 – 0980000	Valve guide reamer	Use ST50/70 valve guide reamers.
※ ⑬	07980 – 0360100	90° intake valve seat cutter	Use C50 valve seat cutter.
※ ⑭	07980 – 0360200	90° exhaust valve seat cutter	Use C50 valve seat cutter.
※ ⑮	07980 – 0360300	Flat intake valve seat cutter	Use C50 valve seat cutter.
※ ⑯	07980 – 0360400	Flat exhaust valve seat cutter	Use C50 valve seat cutter.
※ ⑰	07980 – 0360500	Interior intake valve seat cutter	Use C50 valve seat cutter.
※ ⑱	07980 – 0360600	Interior intake valve seat cutter	Use C50 valve seat cutter.
※ ⑲	07980 – 0360700	Valve seat cutter holder	Use C50 valve seat cutter holder.
	07900 – 1240000	CF50 Special tool set	
	07900 – 1240100	CF70 Special tool set	

※ Use nos. ⑬ thru ⑲ for CF50 only. For CF70, use valve seat grinder.
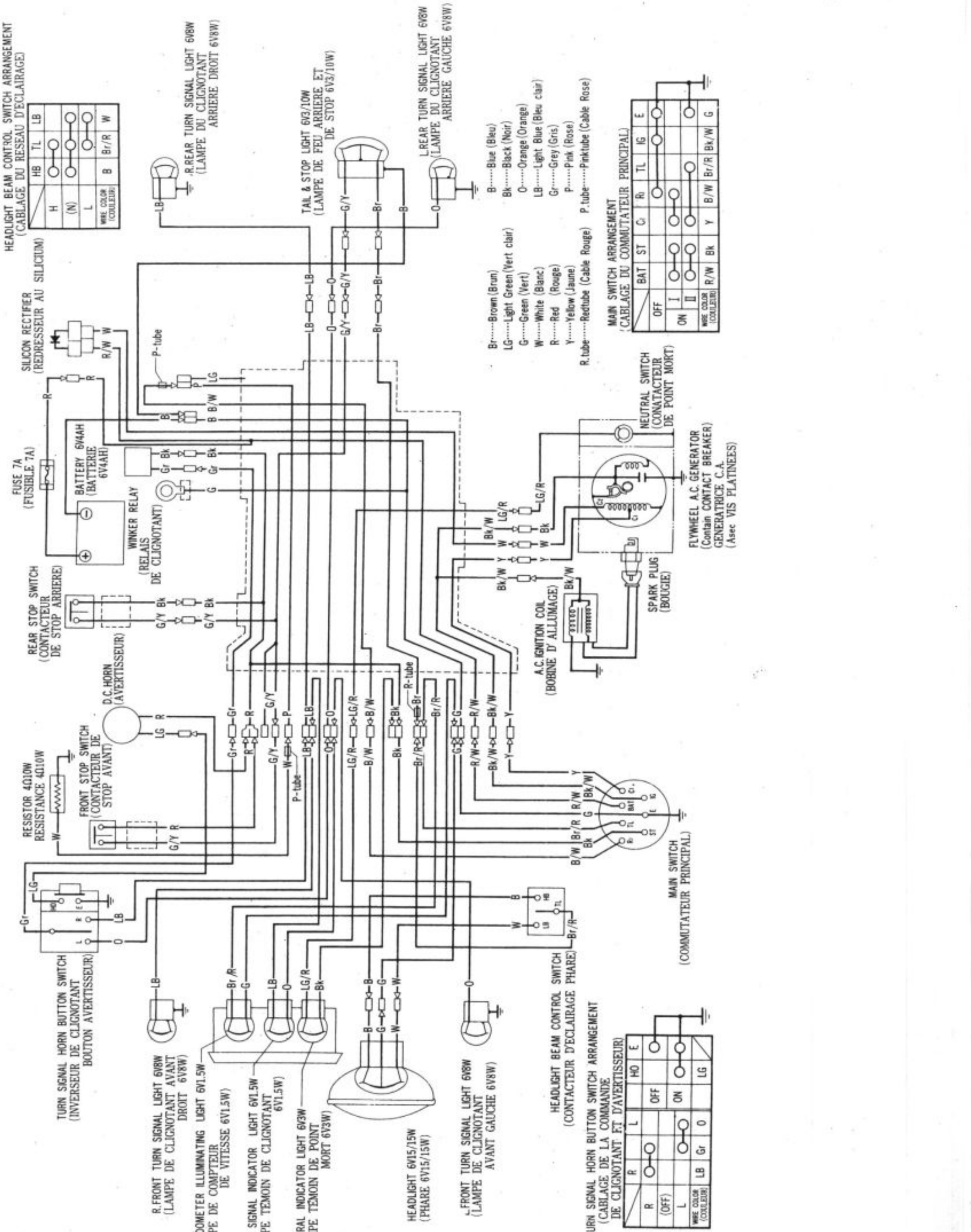
7. Wiring diagram CF50,70